Video Production Switcher

Technical Manual

ROSS®

ROSS VIDEO LIMITED

"The Production Switcher People"

ROSS VIDEO LIMITED
Production Switchers

IN STOCK #4500

RVS 210A

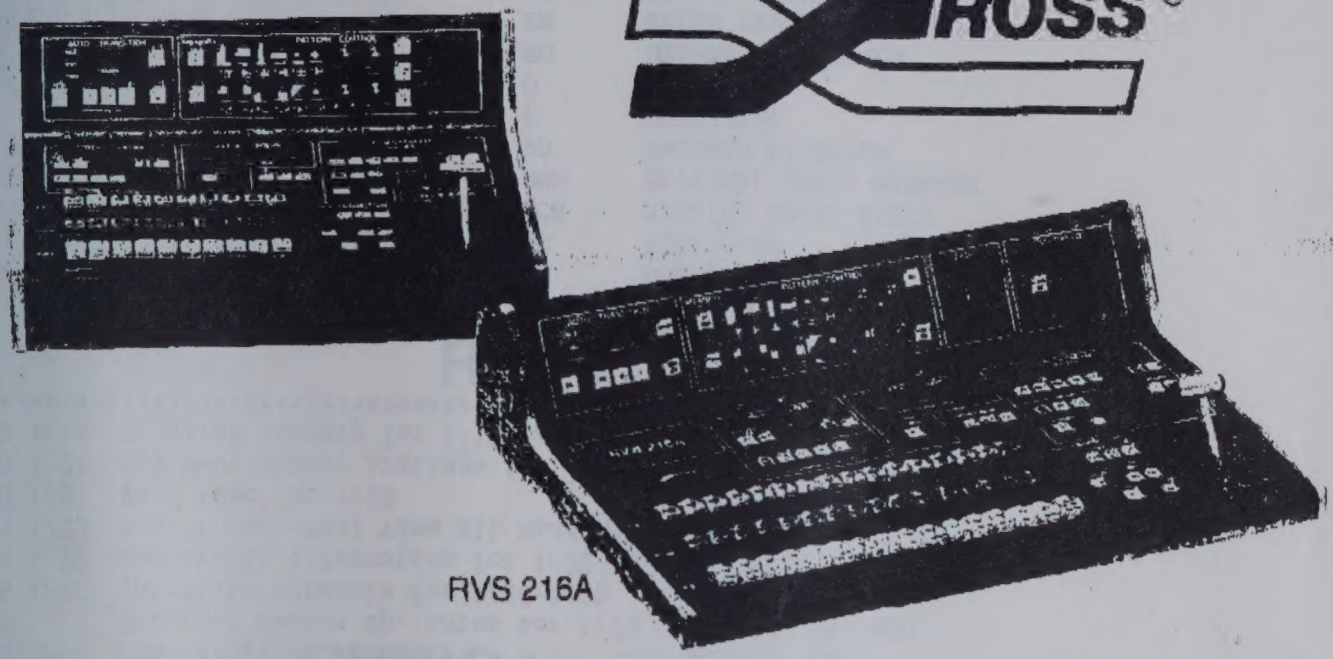

RVS 216A

ROSS 200 SERIES
It's true what they say about small packages...the 200 Series brings big switcher quality performance to the world of small switchers.

No other compact production switcher gives you the flexibility of a true Multi-Level Effects system (MLE), linear downstream keying, storage of 12 complete switcher set-ups, RGB chroma keying, component chroma keying, as many as 50 patterns, key memory and serial interface to a wide range of editing systems.

Self keys, matte keys, RGB keys, linear Downstream Keys...the 200 Series has played a major role in establishing Ross as an industry leader in quality keying...

Good looking bordered keys are made possible by the linear key border generator, virtually eliminating the jaggedness common to digital border generators.

FEATURE PACKAGE 1
The MODIFY button on the control panel provides you with many ways to instantly personalize your switcher as well as access to numerous operational and diagnostic aids.

- PGM/PST bus reversal
- Normal/Reverse wipes
- Extra memory recall modes
- Pulse processor inhibit
- Switchable edit field
- Wipe limit
- Wipe to Downstream key - a unique Ross feature
- Learn key mode
- Continuous switching mode to assist with system timing comparison
- Non-sync detection override

FEATURE PACKAGE 2
- Additional wipe patterns - for a total of 53
- 2 additional DSK border shadow modes give variable-width drop shadow if system is equipped with linear key border generator

RVS 210A PRODUCTION SWITCHER $10,950.00
A 10 input switcher with an overall panel size of 17-9/16" x 14-3/16". When installed on-desk the 210A stands less than 7" tall; when mounted in-desk, its height is reduced to under 5". Supportive electronics take a minimal 3 rack units.

RVS 216A PRODUCTION SWITCHER $13,950.00
When everything has grown except your budget and your table space.

A 16 input switcher that offers the added freedom of the Ross Component RGB/Encoded Chroma Keyer. This combination allows you the flexibility of keying from videotape or from any encoded video signal as well as from camera. Plug-in board ensures simple field installation.

The additional 6 inputs add only 4-7/8" to the panel width, bringing the overall size of the panel to 22 7/16" x 14-3/16". The 216A is available in both above-desk and in-desk models (in-desk model shown). The supportive electronics are housed in a 3 RU frame.

Feature Package 1 and 2 are standard on the 216A.

SYSTEM OPTIONS

RGB or Component Chroma Keyer	$ 800.00
Pulse Regenerator	1,000.00
Linear Key Border Generator	1,500.00
Twelve Event Memory System	1,200.00
Serial Interface Adaptor	1,200.00
Encoded and RGB Chroma Keyer (RVS 216A only)	3,100.00
Feature Package 1 (RVS 210A only, standard on 216A)	1,200.00
Feature Package 2 (RVS 210A only, standard on 216A)	900.00

(Feature Package 2 is available only if system has Feature Package 1 installed)

Other options are available. All options can be retrofitted in the field.

Prices and Specifications Subject to Change Without Notice.
Contact **MIDWEST** for Complete **ROSS VIDEO** Information.

ROSS VIDEO LIMITED
Production Switchers

IN STOCK #4500

RVS 210A

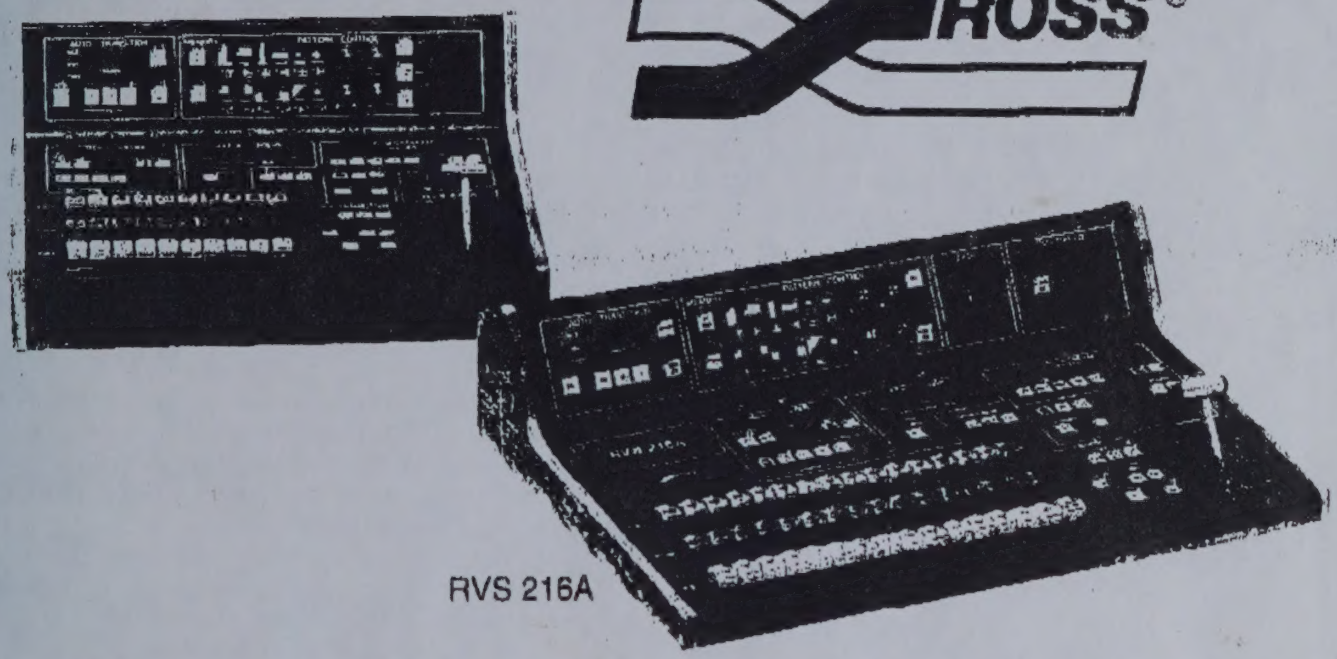

RVS 216A

ROSS 200 SERIES
It's true what they say about small packages...the 200 Series brings big switcher quality performance to the world of small switchers.

No other compact production switcher gives you the flexibility of a true Multi-Level Effects system (MLE), linear downstream keying, storage of 12 complete switcher set-ups, RGB chroma keying, component chroma keying, as many as 50 patterns, key memory and serial interface to a wide range of editing systems.

Self keys, matte keys, RGB keys, linear Downstream Keys...the 200 Series has played a major role in establishing Ross as an industry leader in quality keying..

Good looking bordered keys are made possible by the linear key border generator, virtually eliminating the jaggedness common to digital border generators.

FEATURE PACKAGE 1
The MODIFY button on the control panel provides you with many ways to instantly personalize your switcher as well as access to numerous operational and diagnostic aids.

- PGM/PST bus reversal
- Normal/Reverse wipes
- Extra memory recall modes
- Pulse processor inhibit
- Switchable edit field
- Wipe limit
- Wipe to Downstream key - a unique Ross feature
- Learn key mode
- Continuous switching mode to assist with system timing comparison
- Non-sync detection override

FEATURE PACKAGE 2
- Additional wipe patterns - for a total of 53
- 2 additional DSK border shadow modes give variable-width drop shadow if system is equipped with linear key border generator

RVS 210A PRODUCTION SWITCHER $10,950.00
A 10 input switcher with an overall panel size of 17-9/16" x 14-3/16". When installed on-desk the 210A stands less than 7" tall; when mounted in-desk, its height is reduced to under 5". Supportive electronics take a minimal 3 rack units.

RVS 216A PRODUCTION SWITCHER $13,950.00
When everything has grown except your budget and your table space.

A 16 input switcher that offers the added freedom of the Ross Component RGB/Encoded Chroma Keyer. This combination allows you the flexibility of keying from videotape or from any encoded video signal as well as from camera. Plug-in board ensures simple field installation.

The additional 6 inputs add only 4-7/8" to the panel width, bringing the overall size of the panel to 22 7/16" x 14-3/16". The 216A is available in both above-desk and in-desk models (in-desk model shown). The supportive electronics are housed in a 3 RU frame.

Feature Package 1 and 2 are standard on the 216A.

SYSTEM OPTIONS

RGB or Component Chroma Keyer	$ 800.00
Pulse Regenerator	1,000.00
Linear Key Border Generator	1,500.00
Twelve Event Memory System	1,200.00
Serial Interface Adaptor	1,200.00
Encoded and RGB Chroma Keyer (RVS 216A only)	3,100.00
Feature Package 1 (RVS 210A only, standard on 216A)	1,200.00
Feature Package 2 (RVS 210A only, standard on 216A)	900.00

(Feature Package 2 is available only if system has Feature Package 1 installed)

Other options are available. All options can be retrofitted in the field.

Prices and Specifications Subject to Change Without Notice.
Contact **MIDWEST** for Complete **ROSS VIDEO** Information.

EASYLINK 1670995K001.119 24JAN00 19:27/19:28 EST
FROM: 62942572
FOX BROADCASTING
TO: 62048078
ATTN: W67CA-LIMA OH

EASYLINK #1.70

TO: General Managers, General Sales Managers, Program Directors,Promotion Managers, Traffic Managers

FR: Network Distribution

DA: January 24, 2000

RE: EASYLINK SUMMARY FOR THE WEEK OF JANUARY 18-21, 2000

****
The following Easylinks have been sent since the last report.
****

#	Date	Topic	Sent to
1.52	1/18	NFC Championship Game Confirmation	GM, GSM, PD, PM
1.53	1/18	Individual Station Meetings - NATPE	GM, GSM, PD, PM
1.54	1/18	3-hour movie format "A"	GM, GSM, PD, PM, TM
1.55	1/18	3-hour movie format "B"	GM, GSM, PD, PM, TM
1.56	1/18	2-hour movie format "A"	GM, GSM, PD, PM, TM
1.57	1/18	Network log changes for 1/18	PM, MC, E
1.58	1/18	30 minute format "J"	PD, TM
1.59	1/18	1-hour format- 9PM shows in Feb.	GM, GSM, PD, PM, TM
1.60	1/18	3-hour movie format "C"	GM, GSM, PD, PM, TM
1.61	1/18	Format instructions	PD, TM
1.62	1/18	Format instructions	GM, GSM, PM, PD, TM
1.63	1/19	FCN satellite schedule	PD, SM, TM
1.64	1/20	NFL post season op. notes for 1/23	PD, TM, SM, MCO
1.65	1/20	Satellite schedule for 1/24-1/30	PD, SC
1.66	1/20	End credit information for 1/20-1/30	PM, ND
1.67	1/20	Gen. format-"All Time All Madden"	GM,GSM, PD, PM TM
1.68	1/21	PSAS Feed for 1/28	GM,GSM, PM, CSD,CAD
1.69	1/21	FOX News Sunday listings for 1/23	GM, PD, ND, PM
1.70	1/18	Easylink Summary for 1/18-1/21	GM, GSM, PD, PM, TM

****

AE	ACCOUNT EXECUTIVE	AD	ART DIRECTOR
CAD	COMMUNITY AFFAIRS DIRECTOR	CE	CHIEF ENGINEER
CSD	CREATIVE SERVICE DIRECTOR	GM	GENERAL MANAGER
GSM	GENERAL SALES MANAGER	KC	KIDS CLUB
LSM	LOCAL SALES MANAGER	MCA	MISSING CHILD ALERT
MCO	MASTER CONTROL OPERATOR	NSM	NATIONAL SALES MANAGER
ND	NEWS DIRECTOR	PD	PROGRAM DIRECTOR
PM	PROMOTION MANAGER	P	PUBLICIST
OM	OPERATIONS MANAGER	O	OWNER
R	REPS	RD	RESEARCH DIRECTOR
S	SCHEDULER	SM	SALES MANAGER
SC	SATELLITE COORDINATOR	TM	TRAFFIC MANAGER

RVS 210

TECHNICAL MANUAL

JULY 1990

613- 652- 4886

Copyright 1990 by Ross Video Limited. Printed in Canada. All rights reserved. No part of this publication may be reproduced in any form without prior written permission from Ross Video Limited.

ROSS, ROSS ®, MLE, and ENCORE are registered trademarks of Ross Video Limited, 8 John Street, Iroquois, Ontario, Canada, K0E 1K0.

All specifications are subject to change without notice.

Ross Part Number: A2210-294

Issue 1 July 1990

TABLE of CONTENTS

SECTION 1 INTRODUCTION (This section is currently unavailable) 1-1

SECTION 2 CIRCUIT DESCRIPTIONS (This section is currently unavailable) 2-1

SECTION 3 ALIGNMENT 3-1

- General 3-1
- Control Panel Alignment 3-1
- Video Processor Alignment (PCB 2210-40) 3-2
  - DC Gain 3-2
  - Mix Amp Balances and Bumps 3-3
  - Frequency Response 3-5
  - Crosstalk 3-6
  - Color Timing 3-7
- Pattern and Keyer Alignment (PCB 2210-41) 3-8
  - Fader and DSK Transition 3-8
  - Pattern Generator 3-8
  - MLE Key 3-11
  - Border Gating 3-12
  - DSK Key 3-12
- Matte and Background Alignment (PCB 2210-42) 3-14
- RGB Chroma Keyer Alignment (PCB 2210-44) 3-16
- Analog Key Border Alignment (PCB 2210-43) 3-16
- System Alignment Procedure 3-17

SECTION 4 TECHNICAL DRAWINGS 4-1

This page intentionally left blank.

SECTION 3: ALIGNMENT

General

The alignment information is organized as follows:

1) Control Panel Alignment
2) Video Processor Alignment (PCB 2210-40)
   a) DC Gain
   b) Mix Amp Balances and Bumps
   c) Frequency Response
   d) Crosstalk
   e) Color Timing
3) Pattern and Keyer Alignment (PCB 2210-41)
   a) Fader and DSK Transition
   b) Pattern Generator
   c) MLE Key
   d) Border Gating
   e) DSK Key
4) Matte and Background Alignment (PCB 2210-42)
5) RGB Chroma Keyer Alignment (PCB 2210-44)
6) Analog Key Border Alignment (PCB 2210-43)
7) System Alignment Procedure

Control Panel Alignment (PCB 2210-33)

1) Connect a digital voltmeter (DVM) to the wiper pin of the fader pot and adjust the pot for an approximate range of +0.5 V to +1.8 V.
2) Move the DVM to the wiper pin of the positioner pots and adjust the H and V positioner pots for an approximate range of +0.5 V to +1.5 V.
3) Connect a scope probe to the 56-ohm resistor connected between U12-19 and U11-6. To trigger the scope, connect EXT TRIGGER to U28-14 or 15. The waveform on the scope display is the result of the multiplexing of all the panel pots. Turn some pots clockwise and some others counter-clockwise to observe the maximum and minimum voltage swings.

4) Move the fader pot to obtain the minimum voltage and adjust **R3** for the same minimum voltage as observed in step 3. Now, move the fader to obtain the maximum voltage and adjust **R4** to obtain the same maximum voltage as observed in step 3.
5) Repeat step 4 until the fader has the same range as the other pots in the panel (excluding the H and V positioner pots).
6) Adjust **R11** (gain) and **R13** (dc level) on the small PCB while moving the positioner from limit to limit horizontally to obtain the same voltage range as the pots in step 3.
7) Repeat step 6 using **R12** (gain) and **R14** (dc level) for the vertical positioner.
8) Adjust **R2** to give all of the multiplexed pots (this includes the fader and positioner) a range of 0 V to +10.1 V.

Video Processor Alignment (PCB 2210-40)

DC Gain

The purpose of the following adjustments is to ensure that the switcher operates throughout at unity gain. Selection of various paths through the switcher must not disturb the video output level on either the program bus or the preview bus. In accordance with normal system design practice, the switcher should receive one volt peak-to-peak signals at all inputs and provide normal level outputs. It is normal practice in all Ross switchers to set back porch at ground level, either by clamping or by dc level adjustment.

Required Equipment

To perform these adjustments, you will need a dual channel oscilloscope, a source of WINDOW signal, and the extender board.

Procedure

1) Connect the WINDOW signal to channel "B" of the scope and set the gain to 50 mV per division. Connect a X1 probe to channel "A" and set the gain to 50 mV per division. Invert channel "B" and add it to channel "A" using the ADD function.
2) Place the probe on TP1 and select WINDOW on both PGM and PST busses.
3) Adjust **R22** for unity gain.
4) Place the probe on TP2 and repeat steps 2 and 3, adjusting **R23** for unity gain.
5) Connect the probe to TP3; adjust **R19** for unity gain.
6) Move probe to TP4; adjust **R31** for unity gain.
7) Place probe on TP5, select WINDOW on the key bus and select KEY BUS source and fill on the MLE keyer. Select MLE KEY in the MLE Transition module and perform a transition to take the key to air, then select BKGND in the transition module.

8) Turn the key LEVEL control in the MLE keyer from limit to limit and then set the control fully clockwise (key invert should be off). Adjust **R29** for unity gain.

9) While turning the key LEVEL pot from side to side, no discrepancy in gain should be observed. Should there be a discrepancy, use KEY BUS video as a reference and adjust **R22** (VID A) until no difference is observed.

10) Connect the scope probe to TP6 and adjust **R19** for unity gain. Repeat steps 7, 8, and 9 using **R24**. If there is a difference from side to side, remove it by adjusting **R23** (VID B).

11) Connect a P/V output to the scope input. With the MLE key still on-air, ensure that the signal is being supplied from the "B" side; to do this, touch the pins of U76 with your fingertips and observe the output for a change. If no change is observed, press CUT once. Adjust **R2** for unity gain.

12) Press CUT once and adjust **R16** for unity gain.

13) Connect a PGM output to the scope input and repeat step 11 using **R1** to adjust for unity gain. Ensure that the signal is being supplied from the "B" side; to do this, touch U75 to observe for change in the output.

Mix Amp Balances and Bumps

The purpose of these adjustments is to align the crossfade balances of the mix amplifiers.

Required Equipment

To perform these adjustments, you will need an oscilloscope, a source of WINDOW and STAIRCASE signals, and the extender board.

Procedure

A) MLE Keyer

1) Take the MLE key to air, then select BKGD. Select EXT KEY and KEY BUS fill (with STAIRCASE on EXT, BLACK selected on the key bus).

2) Turn the SOFT control counter-clockwise and turn the key LEVEL control to the approximate middle of its range. Touch the pins of U40 with your fingertips; if no effect is visible on the PGM output, press "CUT" once. Adjust **RV33** for balances.

3)Turn the SOFT control clockwise and adjust **RV32** and **RV37** for minimum bump.

4) Press CUT and adjust **RV36** for balance; adjust **RV38** and **RV34** for bumps.

B) Border

NOTE
This procedure should only be attempted **after** alignment of the mattes.

1) Select WIPE in the MLE Transition module. Select the horizontal wipe pattern and, in the MATTE/BKGND module, set Wipe/Border MLE "LUM" to minimum (fully counter-clockwise).

2) Turn pattern SOFT fully counter-clockwise and adjust the border width pot fully clockwise.

3) Observe the PGM output on the scope and move the fader to mid-point. Touch pins of U41 with your fingertips, and if no effect is visible, move the fader to select wipe "A". Adjust **RV27** for balance and **RV25** for minimum bump (when soft).

4) Move the fader handle to select Wipe "B" and adjust **RV26** for balance and **RV28** for minimum bump.

C) Transition

1) Select WIPE and select BLACK on PGM and PST busses. Turn the "SOFT" control in the Pattern Control module to the fully counter-clockwise position; select the horizontal wipe pattern.

2) Connect the scope to a PGM output BNC and move the fader handle.

3) Adjust **R15** for balance and **RV13** and **RV20** for minimum bump (when soft).

4) Press TRANS P/V and connect the scope to a P/V output BNC.

5) Adjust **RV18** for balance and **RV2** and **RV14** for minimum bump.

D) DSK Keyer

1) Set up a DSK key using STAIRCASE on EXT key; select BLACK on the key bus; select KEY BUS source and fill. Rotate the "SOFT" control to the fully counter-clockwise position.

2) While observing the PGM output on the scope, adjust **RV19** for balance.

3) Adjust **R7** and **R10** for minimum bump when soft.

4) While observing the P/V output, repeat steps 1 through 3 using **R11** for balance and **R12** and **R10** for minimum bumps.

E) S/S Border

NOTE
This procedure should be done **after** alignment of the mattes.

1) Set up a SPLIT SCN key with MATTE fill selected (this activates SPLIT SCN border). Rotate the "BORD" control to the fully clockwise position; select the horizontal wipe pattern.

2) Turn LUM to minimum (fully counter-clockwise) and adjust **R30** for balance and **R35** for minimum bump when soft.

F) Fade-to-Black

1) Connect the scope to a PGM output; select BLACK on PGM and PST busses.

2) Set the FADE auto transition rate to 30 frames. By doing repeated fade-to-black auto transitions, adjust **R5** and **R3** for minimum movement at the set-up level.

3) Fade up from black and note the sync amplitude. Fade down and adjust **R4** for the same sync amplitude (285 mV).

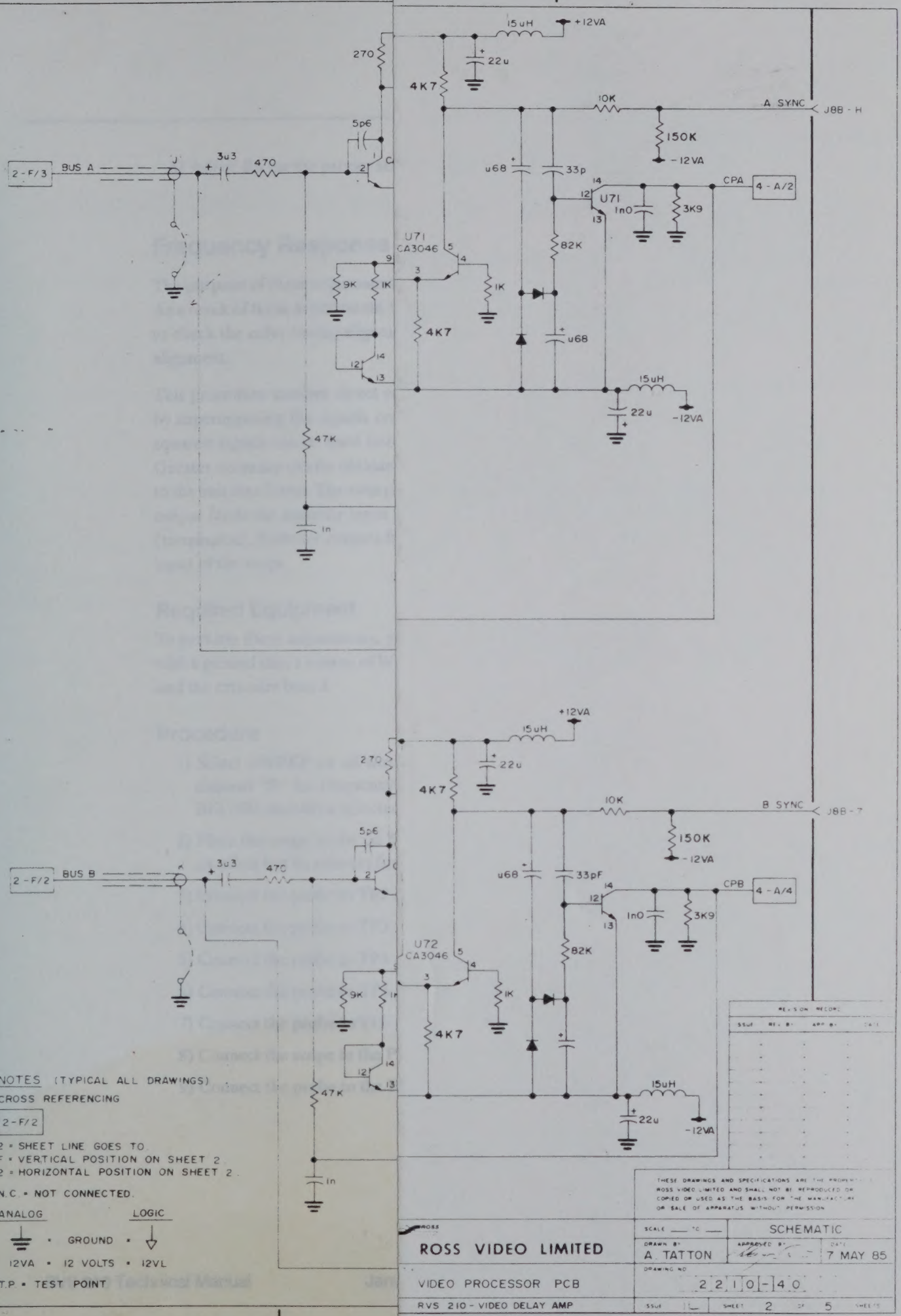
A
F
15uH
+12VA
270
22u
4K7
10K
A SYNC
J8B - H
5p6
150K
-12VA
2 - F/3
BUS A
J
3u3
470
u68
33p
CPA
4 - A/2
U71
1n0
3K9
82K
U71
CA3046
9K
1K
1K
4K7
u68
15uH
22u
-12VA
47K
1n
+12VA
15uH
270
22u
4K7
10K
B SYNC
J8B - 7
5p6
150K
-12VA
2 - F/2
BUS B
3u3
470
u68
33pF
CPB
4 - A/4
1n0
3K9
U72
CA3046
82K
9K
1K
4K7
15uH
22u
-12VA
47K
1n
NOTES (TYPICAL ALL DRAWINGS)
1 CROSS REFERENCING
2 - F/2
2 = SHEET LINE GOES TO
F = VERTICAL POSITION ON SHEET 2
2 = HORIZONTAL POSITION ON SHEET 2
2. N.C. = NOT CONNECTED.
3 ANALOG
LOGIC
GROUND
12VA = 12 VOLTS = 12VL
4 T.P. = TEST POINT
REVISION RECORD
ROSS VIDEO LIMITED
SCHEMATIC
A. TATTON
7 MAY 85
VIDEO PROCESSOR PCB
2210-40
RVS 210 - VIDEO DELAY AMP
SHEET 2 OF 5

2) Turn pattern SOFT fully counter-clockwise and adjust the border width pot fully clockwise.

3) Observe the PGM output on the scope and move the fader to mid-point. Touch pins of U41 with your fingertips, and if no effect is visible, move the fader to select wipe "A". Adjust **RV27** for balance and **RV25** for minimum bump (when soft).

4) Move the fader handle to select Wipe "B" and adjust **RV26** for balance and **RV28** for minimum bump.

C) Transition

1) Select WIPE and select BLACK on PGM and PST busses. Turn the "SOFT" control in the Pattern Control module to the fully counter-clockwise position; select the horizontal wipe pattern.

2) Connect the scope to a PGM output BNC and move the fader handle.

3) Adjust **R15** for balance and **RV13** and **RV20** for minimum bump (when soft).

4) Press TRANS P/V and connect the scope to a P/V output BNC.

5) Adjust **RV18** for balance and **RV2** and **RV14** for minimum bump.

D) DSK Keyer

1) Set up a DSK key using STAIRCASE on EXT key; select BLACK on the key bus; select KEY BUS source and fill. Rotate the "SOFT" control to the fully counter-clockwise position.

2) While observing the PGM output on the scope, adjust **RV19** for balance.

3) Adjust **R7** and **R10** for minimum bump when soft.

4) While observing the P/V output, repeat steps 1 through 3 using **R11** for balance and **R12** and **R10** for minimum bumps.

E) S/S Border

NOTE
This procedure should be done **after** alignment of the mattes.

1) Set up a SPLIT SCN key with MATTE fill selected (this activates SPLIT SCN border). Rotate the "BORD" control to the fully clockwise position; select the horizontal wipe pattern.

2) Turn LUM to minimum (fully counter-clockwise) and adjust **R30** for balance and **R35** for minimum bump when soft.

F) Fade-to-Black

1) Connect the scope to a PGM output; select BLACK on PGM and PST busses.

2) Set the FADE auto transition rate to 30 frames. By doing repeated fade-to-black auto transitions, adjust **R5** and **R3** for minimum movement at the set-up level.

3) Fade up from black and note the sync amplitude. Fade down and adjust **R4** for the same sync amplitude (285 mV).

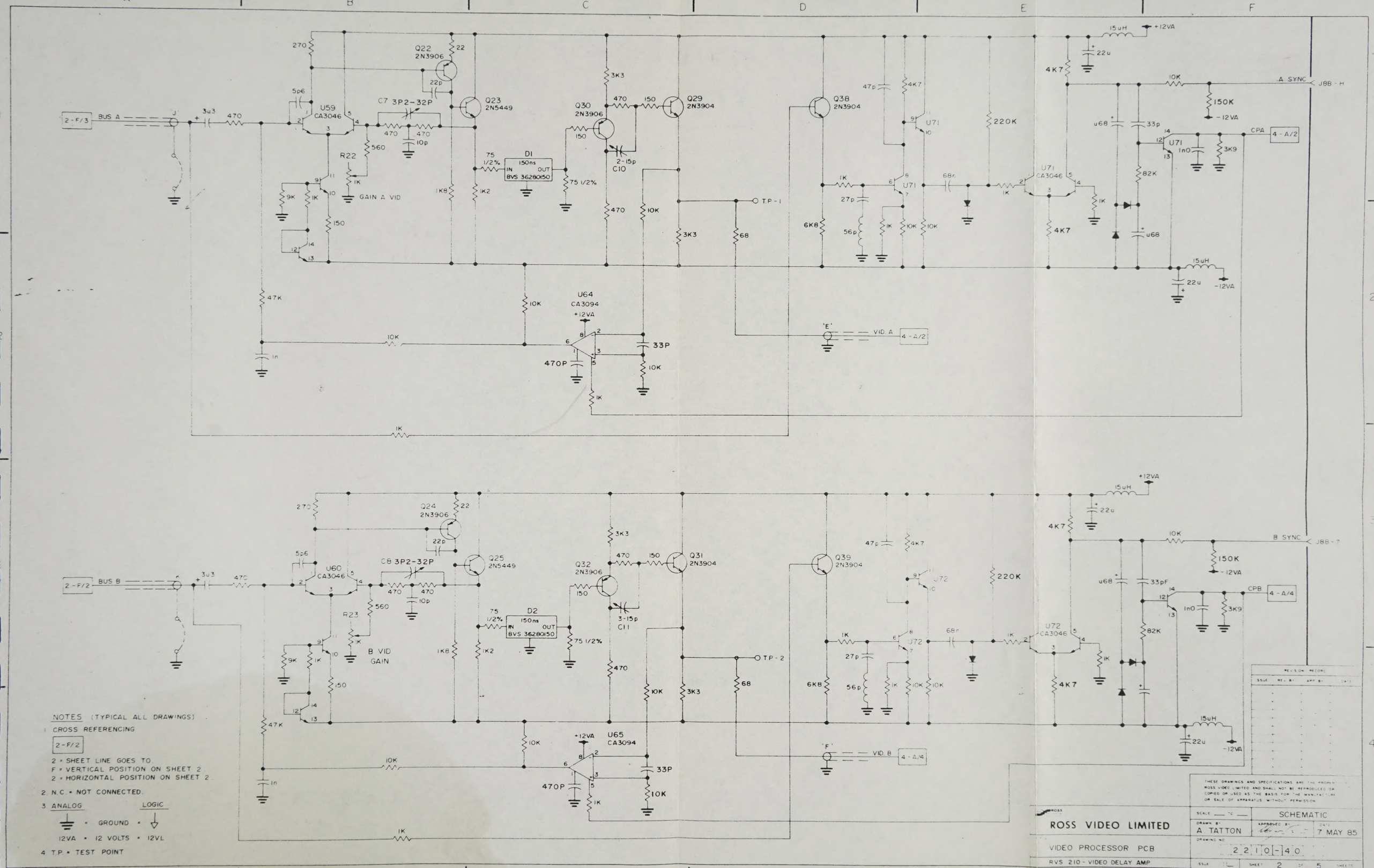
A
B
C
D
E
F
2-F/3
BUS A
J'
3u3
470
270
5p6
U59
CA3046
Q22
2N3906
22
22p
C7 3P2-32P
470
470
10p
560
R22
1K
GAIN A VID
9K
1K
150
Q23
2N5449
1K8
1K2
75
1/2%
D1
150ns
IN
OUT
BVS 36280150
75 1/2%
3K3
470
150
Q30
2N3906
150
2-15p
C10
470
10K
Q29
2N3904
3K3
68
T.P-1
Q38
2N3904
47p
4K7
U71
220K
1K
27p
6K8
56p
1K
10K
10K
68r
U71
CA3046
1K
4K7
1K
15uH
+12VA
22u
4K7
10K
A SYNC
J8B-H
150K
-12VA
u68
33p
U71
1n0
3K9
CPA
4-A/2
82K
u68
15uH
22u
-12VA
47K
10K
U64
CA3094
+12VA
33P
470P
10K
1K
1n
10K
1K
'E'
VID. A
4-A/2
2-F/2
BUS B
3u3
470
270
5p6
U60
CA3046
Q24
2N3906
22
22p
C8 3P2-32P
470
470
10p
560
R23
1K
B VID
GAIN
9K
1K
150
Q25
2N5449
1K8
1K2
75
1/2%
D2
150ns
IN
OUT
BVS 36280150
75 1/2%
3K3
470
150
Q32
2N3906
150
3-15p
C11
470
10K
Q31
2N3904
3K3
68
T.P-2
Q39
2N3904
47p
4K7
U72
220K
1K
27p
6K8
56p
1K
10K
10K
68r
U72
CA3046
1K
4K7
1K
15uH
+12VA
22u
4K7
10K
B SYNC
J8B-7
150K
-12VA
u68
33pF
U72
1n0
3K9
CPB
4-A/4
82K
u68
15uH
22u
-12VA
47K
10K
U65
CA3094
+12VA
33P
470P
10K
1K
1n
10K
1K
'F'
VID. B
4-A/4
NOTES (TYPICAL ALL DRAWINGS)
1 CROSS REFERENCING
2-F/2
2 = SHEET LINE GOES TO
F = VERTICAL POSITION ON SHEET 2
2 = HORIZONTAL POSITION ON SHEET 2
2. N.C. = NOT CONNECTED.
3 ANALOG
LOGIC
GROUND
12VA = 12 VOLTS = 12VL
4 T.P. = TEST POINT
REVISION RECORD
ISSUE
REV. BY
APP. BY
DATE
THESE DRAWINGS AND SPECIFICATIONS ARE THE PROPERTY OF ROSS VIDEO LIMITED AND SHALL NOT BE REPRODUCED OR COPIED OR USED AS THE BASIS FOR THE MANUFACTURE OR SALE OF APPARATUS WITHOUT PERMISSION.
ROSS
ROSS VIDEO LIMITED
VIDEO PROCESSOR PCB
RVS 210 - VIDEO DELAY AMP
SCALE
SCHEMATIC
DRAWN BY
A TATTON
APPROVED BY
DATE
7 MAY 85
DRAWING NO
2 2 1 0 - 4 0
ISSUE
SHEET 2 OF 5 SHEETS

4) Adjust **R6** for the proper set-up level (NTSC = 53 mV; PAL = 0 mV).

Frequency Response

The purpose of these adjustments is to align the frequency response of the video paths. As a result of these adjustments, the color timing will shift; therefore, it will be necessary to check the color timing alignment immediately after performing frequency response alignment.

This procedure involves direct comparison of switcher input and output sweep signals by superimposing the signals on two channels of an oscilloscope. Multiburst or sine-squared signals can be used instead of sweep if somewhat less accuracy is acceptable. Greater accuracy can be obtained by using a distribution amplifier (DA), located close to the switcher frame. The sweep signal is connected to the DA and terminated; one DA output feeds the switcher input and another DA output feeds channel 2 of the scope (terminated). Switcher outputs from various points are then connected to the channel 2 input of the scope.

Required Equipment

To perform these adjustments, you will need a dual channel oscilloscope, a X10 probe with a ground clip, a source of WINDOW signal and SWEEP or MULTIBURST signal, and the extender board.

Procedure

1) Select SWEEP on all three busses with SWEEP looped through the scope on channel "B" for frequency response adjustments. No keys should be on-air and BKGND should be selected in the MLE Transition module.
2) Place the scope probe on TP1 and adjust **C7** for best response. Note that C10 has an effect but its primary function is for phase adjustments.
3) Connect the probe to TP2 and adjust for best response using **C8** and **C11**.
4) Connect the probe to TP3 and adjust **C9** for best response.
5) Connect the probe to TP4 and adjust **C13** for best response.
6) Connect the probe to TP5 and adjust **C12** and **C14** for best response.
7) Connect the probe to TP6 and adjust **C19** for best response.
8) Connect the scope to the PGM output and adjust **C2** for best response.
9) Connect the probe to the P/V output and adjust **C1** for best response.

Crosstalk

The purpose of these adjustments is to minimize crosstalk in the mix amplifiers.

Required Equipment

To perform these adjustments, you will need a source of COLOR BAR, a source of color black, an oscilloscope or video noise meter, and an extender board.

> NOTE:
> If a pure color black signal (known to be free of inherent crosstalk levels) is not available, a source of in-house sync that has been attenuated down to normal video level may be used.

Procedure

1) Connect a clean signal (color black or attenuated sync) to one of the switcher inputs and COLOR BAR to an adjacent input.
2) Connect the input of the noise meter to the program output of the switcher.
3) Select the clean signal on the PGM bus and the COLOR BAR signal on the PST bus. Make sure all keys are turned off and that only BKGND is selected in the MLE Transition module.
4) Set the noise meter to measure chrominance crosstalk in the range of −50 to −60 decibels. Adjust **C5** for best crosstalk.
5) Select KEY BUS source and fill on the MLE keyer and select the clean signal on the key bus. Set the key LEVEL pot to the fully counter-clockwise position so that the program output is fully key video. Transition the key to air.
6) Set the WIPE BORDER / MLE generator for full saturation (fully clockwise), luminance at mid-position, and hue fully clockwise. Adjust **C15** to eliminate matte crosstalk into the key video.
7) Connect the meter to the preview output of the switcher. Transition the MLE key off and select only BKGND in the MLE Transition module. Select the clean signal on the PST bus and select COLOR BAR on the PGM bus. Adjust **C4** for best possible crosstalk. Worst case, program or preview should be better than −53 dB.

Color Timing

The purpose of these adjustments is to align the color timing of the mix amplifiers.

Required Equipment

To perform these adjustments, you will need a source of COLOR BAR and WINDOW signals and an extender board.

Procedure

NOTE:
This procedure assumes that the frequency response of the system has been checked or calibrated according to the previous procedure.

1) Monitor the PGM output of the switcher on the vectorscope. Select COLOR BAR on all three busses. Select SPLIT SCN source and KEY BUS fill on the MLE keyer. Select the second pattern on the Pattern Control module. Select MLE KEY and press CUT in the MLE Transition module.
2) Rotate the key "SOFT" control in the MLE keyer from limit to limit, then to the fully counter-clockwise position. Rotate the key "LEVEL" control from limit to limit, then to approximately mid-position.
3) Press BKGND in the MLE Transition module. Brush your fingertip along the pins of U59. If no disturbance occurs on the vectorscope display, press the CUT pushbutton in the MLE Transition module. Adjust **C7** and **C10** to align the vectors.
4) Press CUT in the MLE Transition module. Adjust **C8** and **C11** to align the vectors.
5) Select WIPE in the MLE Transition module. In the Pattern Control module, rotate the "SOFT" and "BORDER" controls from limit to limit, returning them both to the fully counter-clockwise position. Move the fader handle to the center of its travel. Adjust **C12** and **C17** to align the vectors.
6) Remove power from the system. Re-install the 2210-40 circuit board in the frame, then return power to the system.
7) Select EXT KEY using WINDOW as the EXT key source. Select COLOR BAR on the PGM and KEY busses. Select KEY BUS fill. Put the DSK key on air and connect the vectorscope to a PGM output. Turn key "LEVEL" clockwise and note the phase of the COLOR BAR signal on the PGM bus. Turn key "LEVEL" counter-clockwise and adjust **C2** (if insufficient range, re-select D1 delay tap) for the same phasing as the PGM bus.

NOTE:
There is a delay of approximately six degrees when the PCB is on the extender board.

Pattern and Keyer Alignment (PCB 2210-41)

Fader and DSK Transition

Procedure

1) Connect a DVM to TP13 and adjust **R19** and **R21** for a range of +3 V when the MLE fader handle is moved from limit to limit.

2) Connect the DVM to TP12. Press "AUTO DISS" in the DSK and adjust **R14** and **R15** for a range of +3 V to +4 V.

2) Connect the DVM to TP11. Press "PGM FADE" and adjust **R12** and **R13** for a range of approximately +2.75 V to +3.25 V.

Pattern Generator

The purpose of these adjustments is to align the pattern generator circuitry.

Equipment Required

To perform these adjustments you will need a monitor, a digital voltmeter, a dual channel oscilloscope, and the extender board.

Procedure

1) Remove power from the system, then install the extender board in the J10 position in the frame. Place the 2210-41 circuit board on the extender board, then return power to the system.

2) Connect "A" channel of the oscilloscope to a source of system blanking. Using the scope's variable gain, adjust the scope so that the vertical display is 5 centimeters high. Also adjust the sweep rate so that one horizontal line will be 8 centimeters from trailing to leading edge of blanking. Set the scope vertical mode to alternate and trigger the scope externally from system sync.

3) Make sure that, with the input grounded, the 0 V dc level of B channel is exactly at the center of the screen and that the A channel blanking waveform is positioned exactly to center the waveform +/−2.5 centimeters from the center of the screen.

NOTE:
Measurement and adjustment points shown (vert −-) apply to a later similar adjustment of the vertical rate waveform generator.

4) Using a X10 probe, connect the B channel of the scope to **TP16** (vert - TP18). Set the input sensitivity to 200 mV per centimeter.

5) On the Pattern Control module, select the square pattern and press the POSNR ON pushbutton. Using the positioner joystick and **R27** (vert - R36), adjust the waveform for 1.0 V peak to peak. Use **R33** (vert - R41) to set the dc level.

6) Repeat steps 4 and 5 for the vertical circuit.

7) Select the diamond pattern. Rotate the pattern SOFT control from limit to limit, then to the fully counter-clockwise position. Select BLACK on the PST bus, COLOR BKGND on the PGM bus and WIPE and BKGND in the MLE Transition module. Turn the LUM control on the MATTE/BKGND module from limit to limit, leaving it to rest in the fully clockwise position. Move the fader handle to mid--position.

8) Observing the PGM monitor, adjust **R16** and **R17** to obtain the required range when moving the positioner joystick from hard left to hard right.

NOTE:
R17 (a dc adjustment) will have a greater effect on the left hand positioning.
R16 (a gain adjustment) will have its greatest effect on the right side of the screen. Repeat this step until the range has been made satisfactory.

9) Adjust **R18** (dc) and **R20** (gain) to obtain the required range when moving the positioner joystick between the top and bottom of the screen. Use R18 to adjust the top and R20 to adjust the bottom. Repeat this step until the range has been made satisfactory.

10) Press the POSNR ON pushbutton in the Pattern Control module until the indicator lamp is extinguished. Select the square pattern and set the fader handle for a small square on the monitor.

11) Adjust **R42** to obtain the correct aspect ratio.

12) Move the fader handle until the square pattern almost fills the screen. Adjust **R17** to center the pattern left to right.

13) Adjust **R18** to make the spacing at the top of the screen the same as the spacing at the sides.

14) Adjust **R36** to align the bottom spacing. At this point, the spacing around all four sides should be equal.

15) Set the fader handle for a small square and repeat steps 11 to 14 until the large and small square are satisfactory.

16) Select the lower left corner insert pattern on the Pattern Control module. Move the fader handle until the pattern has almost left the top of the screen. Note the amount of space left at the top.

17) Select the upper left corner insert pattern. Adjust **R35** to achieve the same spacing as in step 16.

18) Select the upper right corner insert pattern. Move the fader handle until the pattern has almost left the left hand side of the screen. Note the amount of space remaining on the left.

19) Select the upper right corner insert pattern. Adjust **R26** to achieve the same spacing as in step 18.

20) Re-check steps 16 to 19 to ensure satisfactory corner insert centering.

21) Select the diamond pattern. Press the REV pushbutton in the Pattern Control module repeatedly and move the fader handle until the pattern on the screen does not change size. Adjust **R43** and **R46** to make the points of the diamond touch the edges of the raster.

NOTE:
R43 adjusts the size of the pattern while R46 adjusts the aspect ratio.

22) Select the square pattern. Rotate the RATIO control in the Pattern Control module from limit to limit and return it to the center of its travel. Press the ASPECT ON pushbutton repeatedly and adjust **R45** until no change in the aspect of the square is apparent. Set the RATIO control to the fully counter-clockwise position.

23) Press the ASPECT ON pushbutton until the indicator lamp is lit. While rotating the RATIO control over the first 30% of its range, adjust **R44** until the vertical edges of the square pattern are not affected by the control. Extinguish the indicator lamp by pressing the ASPECT ON pushbutton and return the fader handle to a limit.

24) Connect the X10 probe from the B channel of the scope to **TP16** (vert - TP18). Select the circle pattern and select "POSNR ON" in the Pattern Control module; select SPLIT SCN (source) in the MLE keyer module. Adjust **R32** (vert - R40) until the parabola just loses its pointed tip. Increase the scope sensitivity to view this effect.

25) Repeat the previous step for the vertical circuitry. Adjust **R39** to place the tip of the vertical parabola at 0.5 V dc.

26) Set the sensitivity of the B channel of the scope to 200 mV per centimeter and alternate between A (blanking) and B channels. Adjust **R29** and the positioner joystick to obtain a signal of 1 V peak-to-peak. Use **R31** to place the tip of the parabola at the base of the blanking waveform.

27) Select MLE KEY and CUT in the MLE Transition module; select COLOR BKGND on the PGM bus. Adjust the key LEVEL control in the MLE keyer module to obtain a large circle on the program monitor. Adjust **R37** to form a circular wipe pattern.

28) Press CUT, WIPE, and BKGND in sequence in the MLE Transition module. Select BLACK on the PST bus.

29) Move the fader handle until a circle of half raster height is obtained. Adjust **R28** to form a circular wipe pattern.

30) Adjust **R30**, **R38**, and the fader handle to obtain a small circle of satisfactory shape. Return the fader handle to a limit and select BLACK on the PGM and PST busses.

31) Press the SEL pushbutton in the MATTE / BKGND module until the WIPE BORDER / MLE indicator lamp is lit. Rotate the LUM control from limit to limit, then to the fully clockwise position. Turn the BORDER and SOFT controls in the Pattern Control module fully clockwise and select the first wipe pattern.

32) Adjust **R22** to prevent the wipe border from "popping" off the screen at the end of a fader transition. Move the fader handle to approximately mid-position. Adjust **R23** to prevent the pattern edge from shifting as the SOFT control in the Pattern Control module is rotated from limit to limit.

33) In the Pattern Control module, set the SOFT control to fully counter-clockwise position and adjust the BORDER control to obtain a narrow border. Adjust **R25** to maintain the border width on two consecutive wipes. Turn the BORDER and SOFT controls fully clockwise.

34) Remove the X10 probe from the B channel of the scope. Install a tee and 75-ohm termination on the input and connect a coax to the PGM output of the switcher. Move the fader handle to mid-position. View the B channel of the scope at 0.1 V per centimeter. If adjusting R3 affects the border waveform, move the fader handle to the limit indicated by the fader direction lamps (to the left of the fader assembly) and return it to mid-position.

35) Turn the pattern SOFT control fully counter-clockwise. Note the amplitude of the border waveform. Turn the pattern SOFT control fully clockwise. Adjust **R24** to achieve half the amplitude noted previously. Adjust **R3** to maintain the soft border width on two consecutive wipes. Rotate the pattern SOFT control to the fully counter-clockwise position.

36) Select the diamond pattern in the Pattern Control module. While repeatedly pressing the REV pushbutton in the Pattern Control module, move the fader handle until the pattern does not change size (mid-point of the fader travel). Select DISS on the MLE Transition module and COLOR BKGND on the PGM bus. Note the amplitude of the white level. Select BLACK on the PGM bus and COLOR BKGND on the PST bus. Adjust **R34** to remove half the error in white level caused by the crosspoint change. Alternate selections on the PGM/PST busses and re-touch R34 until both selections are satisfactory.

MLE Key

Procedure

1) Connect STAIRCASE as a primary input to the switcher; select STAIRCASE on the key bus. Select KEY BUS source and MATTE fill on the MLE keyer.

2) Rotate the SOFT control to the fully counter-clockwise position (off) and transition the key to air.

3) Connect the scope probe to **TP1** and adjust the key LEVEL control to cause keying in the center of the line. Rotate the SOFT control to the fully clockwise position and adjust **R10** so that the signal amplitude is one-half of the original amplitude. Adjust **R9** to eliminate any shifting while turning the SOFT control.

4) With the MLE key still on air, select BKGND transition and select the vertical wipe pattern without border. Rotate the MLE keyer SOFT control to the fully clockwise position (maximum softness). Set the MLE fader to wipe in the center of the screen and adjust **R4** to remove any unbalances seen on the monitor.

Border Gating

Procedure

1) Connect STAIRCASE as a primary input to the switcher; select STAIRCASE on the key bus. Select KEY BUS source and MATTE fill on the MLE keyer.

2) Transition the key to air and rotate the MLE keyer SOFT control to the fully clockwise position.

3) Select the vertical wipe pattern with a border and adjust **R47** so that the wipe border just reaches the edge of the MLE key.

DSK Key

Procedure

NOTE:
Do not plug in the 2210-43 Analog Key Border PCB until after step 4 of this procedure has been completed.

1) Connect STAIRCASE, COLOR BAR, WINDOW, and MULTIBURST as primary inputs to the switcher; select STAIRCASE on the key bus. Select KEY BUS source and MATTE fill on the DSK keyer.

2) Rotate the SOFT control to the fully counter-clockwise position (off) and transition the key to air.

3) Connect the scope probe to **U14 pin 7** and adjust the key LEVEL control to cause keying in the center of the line. Rotate the SOFT control to the fully clockwise position and adjust **R11** so that the signal amplitude is one-half of the original amplitude. Adjust **R7** to eliminate any shifting while turning the SOFT control.

4) Connect the probe to **U14 pin 11** and adjust **R6** to center the waveform at 7 V. Move the probe to **U14 pin 6** and adjust **R1** to place the blanking portion of the waveform at 0 V dc.

5) Install the 2210-40 PCB on the extender board and measure the voltage at U41 pin 4 or 6. This voltage will be referred to as the reference voltage. Install the 2210-40 PCB back in its location in the switcher frame.

6) Select WINDOW on the key bus. Set up a DSK key on air using KEY BUS source and MATTE fill. Select "OFF" in the Border section.

7) Connect the scope probe to **TP4** and, if there is no analog key border PCB installed, adjust **R6** to center the waveform about the reference voltage. If the key border option is present, adjust **R4** on the 2210-43 PCB to center the key waveform about the reference voltage.

8) Connect the scope to the program output of the switcher. Set up an MLE key and a DSK key using WINDOW as key source and fill. Select the DSK mask on and mask approximately one-half of the DSK key in order to observe both the MLE key and the DSK key.

9) Select "DISS", "DSK TIE", and "MLE KEY" in the MLE Transition module. Move the fader handle until the MLE key is half faded down. Adjust **R15** to set the DSK key to the same voltage level as the MLE key.

10) Move the MLE fader handle until the MLE key is 90% faded up and adjust **R14** to bring the DSK key to the same level.

11) Connect the scope to the preview output. Select "TRANS P/V" and move the MLE fader handle to fade the MLE key 50%. Adjust **R2** to bring the DSK key to the same voltage level.

12) Repeat steps 8 through 11 until the DSK and MLE track together with the fader travel.

13) With the DSK key on air, select WINDOW on the key bus and select KEY BUS source and fill in the DSK keyer. Connect the probe to **TP 10** and adjust **R5** for unity gain with reference to the signal at J10-V (key video in).

14) Select MULTIBURST on the key bus and adjust the key LEVEL control to the fully counter-clockwise position. Adjust **C1** for best frequency response.

15) If the 2210-43 Analog Key Border option is installed, it must be calibrated before proceeding further. Refer to the alignment procedure for this option.

16) Connect WINDOW as the external key source. Select EXT KEY, using WINDOW as the EXT key source, and KEY BUS fill. Select COLOR BAR on the key and PGM busses and transition the DSK key to air.

17) Connect a vectorscope to the PGM output. Rotate the key LEVEL control to the fully clockwise position and note the phase of the COLOR BAR signal on the PGM bus. Rotate the key LEVEL control to the fully counter-clockwise position and adjust **C2** for the same phasing as the PGM bus. If there is insufficient range, re-select delay tap **D1**.

NOTE:
There is approximately six degrees of delay when the circuit board is mounted on the extender board.

Matte and Background Alignment (PCB 2210-42)

Required Equipment

To perform these adjustments, you will need a dual channel oscilloscope, a vectorscope, a digital votmeter, a source of WINDOW and a reference COLOR BAR signal, and the extender board.

Procedure

CHROMA

1) Connect a X1 scope probe to the vectorscope; attach probe to TP6 and note the position of the vector.
2) Place probe on TP7 and adjust **C6** for a phase difference of 90 degrees compared to TP6.
3) For PAL systems, place the probe on TP6 and adjust **C5** to switch 180 degrees each field. For NTSC, adjust **C5** for equal chroma at TP6 and TP7 while still maintaining 90 degrees with C6.

BLACK

1) Observe PGM output and adjust **R19** for a sync amplitude of 570 mV for NTSC (PAL – 600 mV).
2) For PAL systems, add jumper and adjust **R21** for 90 degrees burst locus. For NTSC, adjust **R21** completely counter-clockwise .
3) Watching the vectorscope, adjust **R20** to obtain as straight a line as possible between the zero point and the color burst dot.
4) Adjust **R15** for a burst amplitude of 570 mV for NTSC (PAL 600 mV).

BKGND

1) Connect the scope to a PGM output and adjust **R6** for proper luminance range (with BKGND selected: 1 V p-p).
2) Adjust **R5** for set-up level (53 mV NTSC, no set-up for PAL).
3) Set the BKGND matte generator "SAT" pot to minimum. Connect a vectorscope to a P/V output and adjust **R11** and **R16** so that no saturation exists.
4) Turn SAT to maximum and adjust **R9** for proper saturation level, compared to the red vector of the COLOR BAR.
5) Watching the vectorscope, adjust **R7** to obtain as straight a line as possible between the center point of the vectorscope and the color vector dot.

BORDER MATTE

1) Connect the scope to a PGM output and adjust **R10** for proper luminance range (with COLOR BKGND selected on PGM and PST busses, bordered wipe with pattern #1).

2) Set the WIPE BORDER/MLE matte generator "SAT" pot to minimum. Connect a vectorscope to a P/V output and adjust **R12** and **R17** so that no saturation exists.

3) Adjust "SAT" to maximum and adjust **R22** for proper saturation level. (Compare to the COLOR BAR vector).

DSK CHROMA MATTE

1) Connect the vectorscope to a PGM output. Set up EXT key, KEY BUS source, MATTE fill, and adjust the DSK key LEVEL control fully counter-clockwise. Set DSK "SAT" to minimum and adjust **R18** and **R13** so that no saturation exists.

2) Turn the "SAT" control to maximum and adjust **R14** for proper level. (Compare to red COLOR BAR vector).

3) Connect the scope to a PGM output and adjust **R8** on the 2210-41 board to obtain the same luminance level as was set for the BKGND and BORDER mattes.

BLACK, MATTE, and COLOR BKGND TIMING

1) Connect a vectorscope to the P/V output and select COLOR BAR on the PST bus. Adjust the gain on the vectorscope to place the vectors in the 75% boxes.

2) Using the coarse jumper and adjusting the fine phase pot (**R24**), correctly time COLOR BKGND to COLOR BAR.

3) Connect the vectorscope to the PGM output and select COLOR BAR on the PGM bus. Align the vectors into the 75% boxes; adjust **C2** and **C7** for correct burst phase and gain.

4) Connect the vectorscope to the P/V BNC again. Switch between COLOR BKGND and BLACK on the PST bus. Adjust **C1** to remove any difference in the burst phase.

5) Select PGM and COLOR BKGND with the BKGND matte "SAT" control set to maximum. Rotate the HUE pot from limit to limit and then set it fully counter-clockwise. Adjust **C3** to place the vector on the B-Y axis. Go back to the 2210-40 PCB and adjust **C16** so that the split screen border is the same phase as the wipe border.

6) Select WIPE. Turn the BORDER pot clockwise to give a full border and set the MLE fader to some point between its limits. Adjust **R8** so that the WIPE BORDER /MLE matte vector is superimposed onto the COLOR BKGND vector.

NOTE:
Alignment of the DSK Chroma Matte section of the 2210-43 PCB should be done before the next step is attempted.

7) Select KEY BUS source and MATTE fill; select WINDOW on the key bus and COLOR BKGND on the PGM bus. Select BKGND in the MATTE/BKGND module and turn the HUE pot from limit to limit and then to the fully counter-clockwise position. Transition the DSK key to air and select DSK in the MATTE/BKGND module. Rotate the HUE pot from limit to limit and then set it to the fully counter-clockwise position. Adjust C4 to superimpose the DSK vector onto the COLOR BKGND vector.

NON SYNC

1) Connect a coax to the BLACK output BNC at the rear of the frame. Place a variable delay line in series with this coax and connect it to one of the video inputs; select 1000 ns of delay.

2) Select the delayed black input on all three busses and adjust **R2** until the "non sync" LEDs just turn on. Select 900 ns of delay and check that the non-sync LEDs turn off; if not, re-adjust **R2**.

NOTE:
This setting may be slightly different (approximately 100 ns) with the 2210-42 board mounted inside the frame instead of on the extender board.

RGB Chroma Keyer Alignment (PCB 2210-44)

Procedure

1) Set up a suitable chroma key scene and camera. Connect a scope probe to the emitter of Q2 and adjust **R1** (gain) for a signal amplitude from the blanking portion to the maximum positive peak of 0.7 V when keying blue.

Analog Key Border Alignment (PCB 2210-43)

Procedure

IMPORTANT:
Before this board is plugged in, the "KEY IN" signal (Pin AL) must not be below GND (0 V dc) or damage may result. Refer to the Pattern and Keyer Alignment procedure (2210-41), DSK Key section, step 4 for set up of R1.

1) With the BORDER "OFF" pushbutton selected, align **R4** according to the Pattern and Keyer Alignment procedure (2210-41), DSK Key section, step 7.

2) Select KEY BUS source and MATTE fill with WINDOW selected on the key bus. Set the SOFT pot fully counter-clockwise. Connect channel B of the scope to U10-1. Connect channel A of the scope to U10-5. Adjust the 1H gain pot for unity gain.

3) Move the scope probe (channel A) to U10-8 and adjust the 2H gain pot of DL3 for unity gain.

4) Connect scope probe to U11-8; switch between BORD and SHAD and adjust **R1** on the 2210-41 PCB so that there is no dc shift at the top of the key waveform.

5) Select the outline mode (OUTL) and install DL2 jumper (connects to 4K7 which is connected to U7 pin 4) for equal borders as seen on the monitor. Connect a probe to Q2 collector and adjust **R8** to cancel the dc component of the horizontal rate signal. It may be necessary to re-position the jumper strap for best "fit".

6) Select BORD mode and add DL2 jumper (goes to U11pin 11) for equal borders. Place a scope probe on U3 pin 2 or 6 and record the voltage. Move the probe to U3 pin 13 or 9 and adjust **R5** to center the waveform around the recorded voltage. If necessary, change the jumper position for best "fit".

7) With the DSK still in BORD mode (black borders) and with WINDOW as the key source, turn the DSK "LUM" control to the fully counter-clockwise position. Place the probe on Q10 emitter and adjust **R2** for the border black to be at the same dc level as BLACK.

8) Select WHITE border and turn the DSK "LUM" control fully clockwise. Adjust **R1** to set the white level of the white border the same as the white level of the matte white.

9) Connect a scope probe to Q10 emitter (J10C-AC) and adjust **R6** for unity gain with reference to J10C-Z (key fill in). Adjust **C1** for best frequency response.

10) Select EXT KEY with STAIRCASE as the key signal and KEY BUS fill with BLACK selected on the key bus. Select BORDER (black borders) with DSK "SOFT" turned fully clockwise. Adjust **R3** for minimum "bump" while turning the key LEVEL pot.

11) Select MATTE fill with DSK "SAT" turned fully clockwise (maximum) and the LUM pot set to center for maximum saturation. Adjust C2 for maximum chroma. Adjust R9 for unity chroma gain with reference to J10C-V (chroma matte in).

System Alignment

The sequence of alignment listed below must be followed when complete re-alignment of the switcher is to be attempted.

1) Verify all power supply voltages – control panel and frame.

2) Control Panel Alignment (PCB 2210-33).

3) Fader and DSK transition calibration (PCB 2210-33). Note: The 2210-42 PCB must be installed in the frame for this alignment.

4) Verify that the switcher is fully operational.

5) Black and Background (PCB 2210-42).

6) Video Processor (PCB 2210-40)

   a) DC Gain

   b) Mix Amp Balances and Bumps

   c) Frequency Response

   d) Color Timing

   e) Crosstalk.

7) MLE Key (PCB 2210-41).

8) DSK Key (PCBs 2210-41 and 2210-43).

9) Patterns (PCB 2210-41).

10) Mattes (PCB 2210-42).

SECTION 4: TECHNICAL DRAWINGS – RVS 210

GENERAL

This section contains all technical drawings for the RVS 210 switcher. To assist in finding information easily, drawings are arranged in two major sections:

- Control Panel Drawings
- Frame Drawings

LIST OF DRAWINGS

Control Panel Drawings

2210-30	PRIMARY SWITCH BUS PCB	layout	(1 sheet)
2210-33	PANEL CONTROL PCB	layout	(1 sheet)
2210-20	CONTROL PANEL	schematic	(8 sheets)

Frame Drawings

2210-21	FRAME INTERCONNECTIONS	schematic	(3 sheets)
2210-40	VIDEO PROCESSOR PCB	layout	(2 sheets) N/A
2210-40	VIDEO PROCESSOR PCB	schematic	(5 sheets)
2210-41	EFFECTS CONTROL PCB	layout	(2 sheets)
2210-41	EFFECTS CONTROL PCB	schematic	(6 sheets)
2210-42	FRAME CONTROL PCB	layout	(2 sheets)
2210-42	FRAME CONTROL PCB	schematic	(7 sheets)
2210-43	LINEAR KEY BORDER PCB	layout	(1 sheet)
2210-43	LINEAR KEY BORDER PCB	schematic	(1 sheet)
2210-44	RGB CHROMA KEYER	layout	(1 sheet)
2210-44	RGB CHROMA KEYER	schematic	(1 sheet)
2210-46	POWER SUPPLY PCB	layout	(1 sheet) N/A
2210-76 & 76P	POWER SUPPLY PCB	schematic	(1 sheet) N/A

This page intentionally left blank.

REVISION RECORD			
ISSUE	REV BY	APP BY	DATE

THESE DRAWINGS AND SPECIFICATIONS ARE THE PROPERTY OF ROSS VIDEO LIMITED AND SHALL NOT BE REPRODUCED OR COPIED OR USED AS THE BASIS FOR THE MANUFACTURE OR SALE OF APPARATUS WITHOUT PERMISSION

OSS VIDEO LIMITED	SCALE — TO —	PCB LAYOUT	
	DRAWN BY D.W.R.	APPROVED BY	DATE 17 JAN.'85
ARY SWITCH BUS PCB	DRAWING NO 2210-30		
210	ISSUE 2	SHEET 1 OF 1 SHEETS	

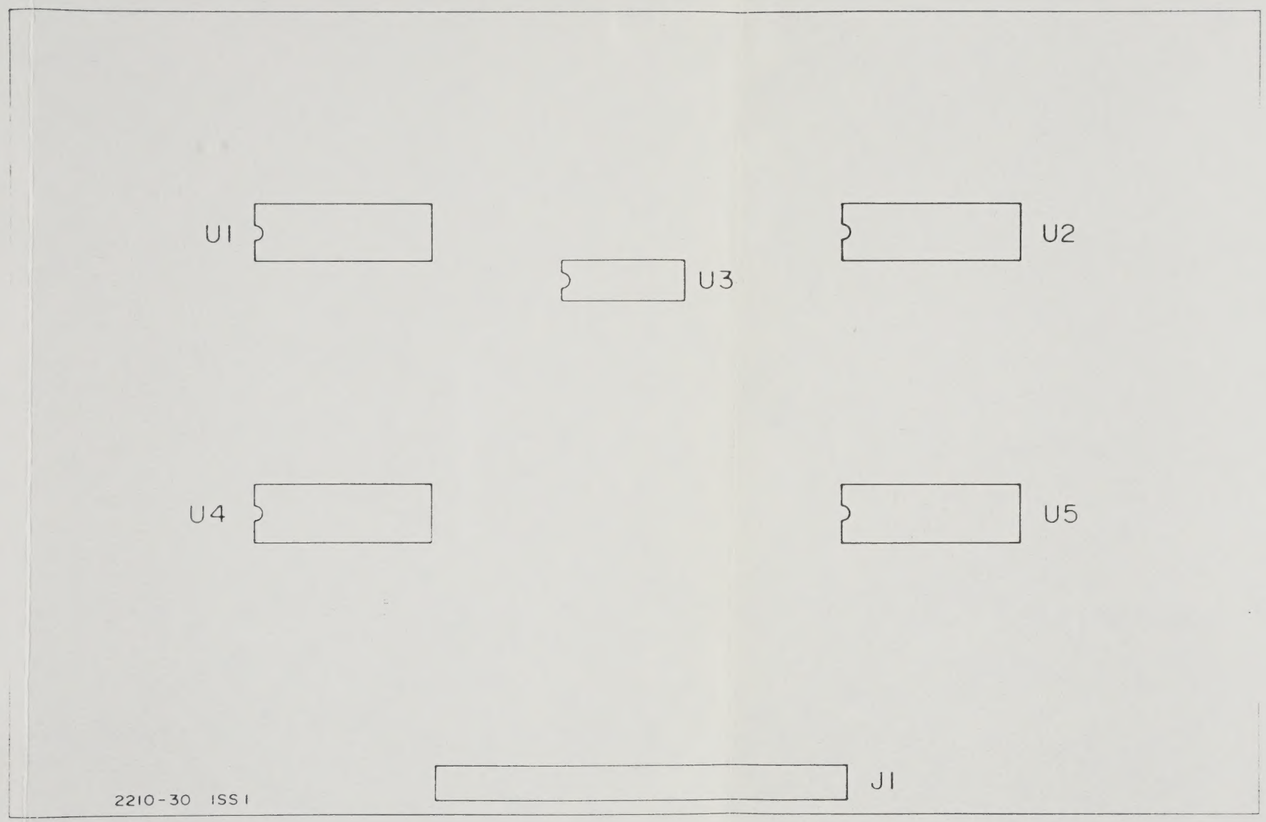

REVISION RECORD			
ISSUE	REV BY	APP BY	DATE

THESE DRAWINGS AND SPECIFICATIONS ARE THE PROPERTY OF ROSS VIDEO LIMITED AND SHALL NOT BE REPRODUCED OR COPIED OR USED AS THE BASIS FOR THE MANUFACTURE OR SALE OF APPARATUS WITHOUT PERMISSION

ROSS VIDEO LIMITED

SCALE — TO — | PCB LAYOUT

DRAWN BY: D.W.R. | APPROVED BY | DATE: 17 JAN.'85

TITLE: PRIMARY SWITCH BUS PCB

DRAWING NO: 2210-30

RVS 210

ISSUE 2 | SHEET 1 OF 1 SHEETS

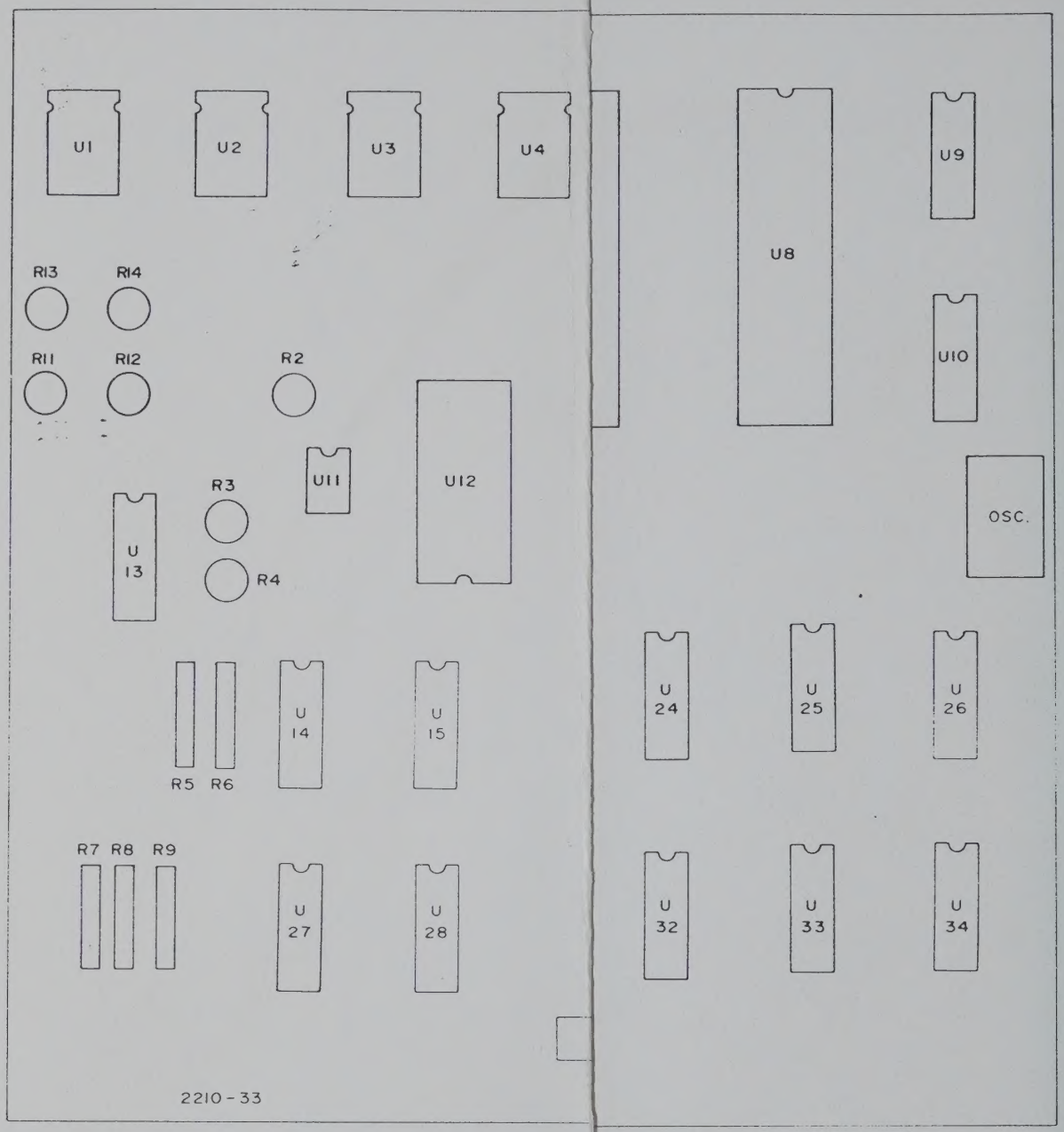

REVISION RECORD

ISSUE	REV BY	APP BY	DATE
1	85-234	[illegible]	21 MAY 85
2B	85-2621	[illegible]	26 JUL 85
2C	S-284	[illegible]	13/8/85
2D	S-376	[illegible]	26/8/85
3	S-336	[illegible]	19/11/85

THESE DRAWINGS AND SPECIFICATIONS ARE THE PROPERTY OF ROSS VIDEO LIMITED AND SHALL NOT BE REPRODUCED OR COPIED OR USED AS THE BASIS FOR THE MANUFACTURE OR SALE OF APPARATUS WITHOUT PERMISSION

ROSS VIDEO LIMITED

PANEL CONTROL PCB

TS 210

SCALE — TO —

PCB LAYOUT

DRAWN BY D.W.R.

APPROVED BY [illegible]

DATE 23 Jan.'85

DRAWING NO 2210-33

ISSUE 3

SHEET 1 OF 1 SHEETS

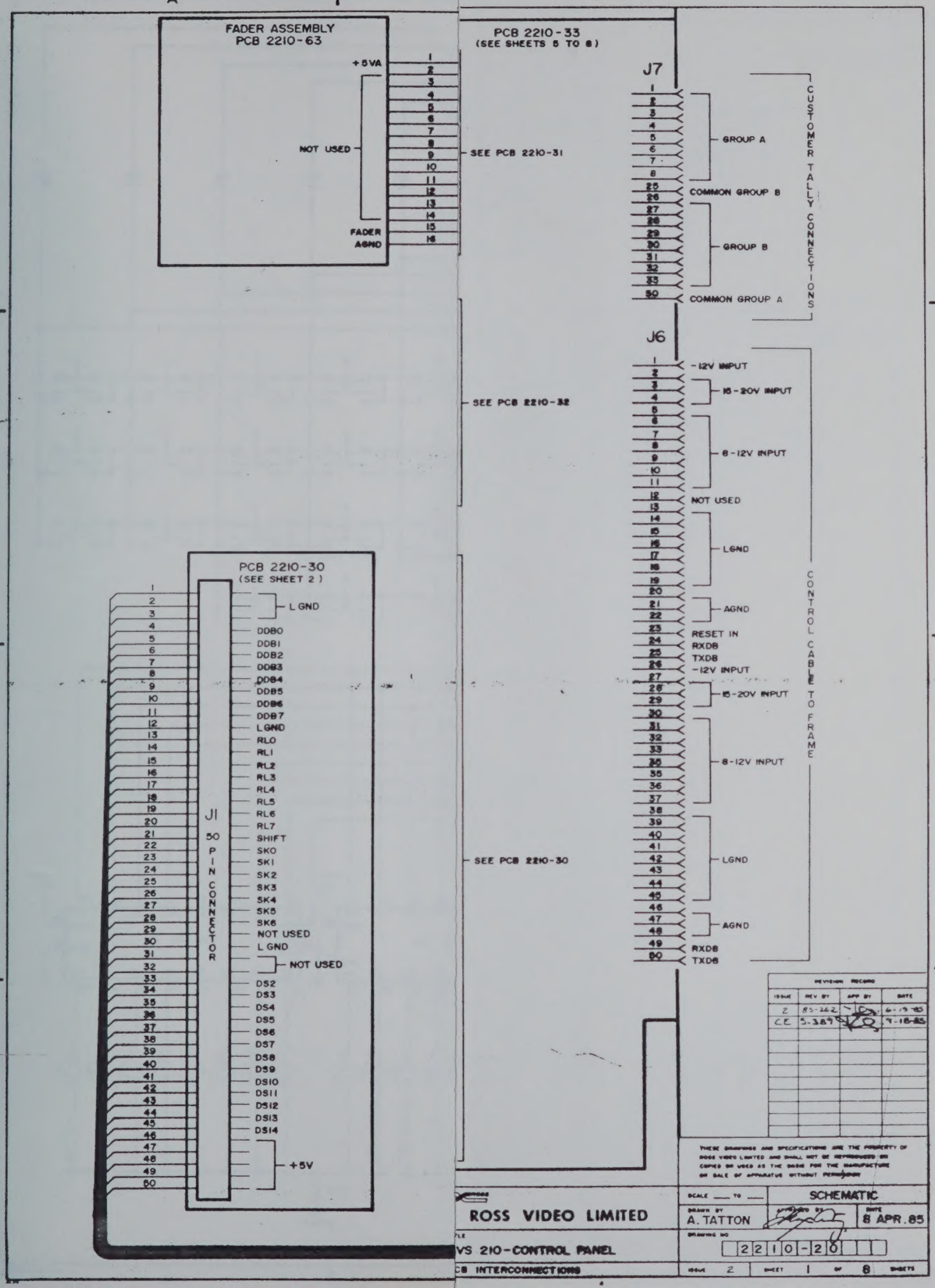
FADER ASSEMBLY
PCB 2210-63
+5VA
NOT USED
FADER AGND
SEE PCB 2210-31
PCB 2210-33
(SEE SHEETS 5 TO 8)
J7
GROUP A
COMMON GROUP B
GROUP B
COMMON GROUP A
CUSTOMER TALLY CONNECTIONS
J6
-12V INPUT
15-20V INPUT
8-12V INPUT
NOT USED
LGND
AGND
RESET IN
RXD8
TXD8
-12V INPUT
15-20V INPUT
8-12V INPUT
LGND
AGND
RXD8
TXD8
CONTROL CABLE TO FRAME
SEE PCB 2210-32
SEE PCB 2210-30
PCB 2210-30
(SEE SHEET 2)
J1
50 PIN CONNECTOR
L GND
DDB0
DDB1
DDB2
DDB3
DDB4
DDB5
DDB6
DDB7
LGND
RL0
RL1
RL2
RL3
RL4
RL5
RL6
RL7
SHIFT
SK0
SK1
SK2
SK3
SK4
SK5
SK6
NOT USED
L GND
NOT USED
DS2
DS3
DS4
DS5
DS6
DS7
DS8
DS9
DS10
DS11
DS12
DS13
DS14
+5V
REVISION RECORD
ISSUE REV BY APP BY DATE
2 85-262 6-13-85
CE 5-389 9-18-85
THESE DRAWINGS AND SPECIFICATIONS ARE THE PROPERTY OF ROSS VIDEO LIMITED AND SHALL NOT BE REPRODUCED OR COPIED OR USED AS THE BASIS FOR THE MANUFACTURE OR SALE OF APPARATUS WITHOUT PERMISSION
ROSS VIDEO LIMITED
SCHEMATIC
A. TATTON
8 APR.85
VS 210-CONTROL PANEL
CB INTERCONNECTIONS
2210-20
ISSUE 2 SHEET 1 OF 8 SHEETS

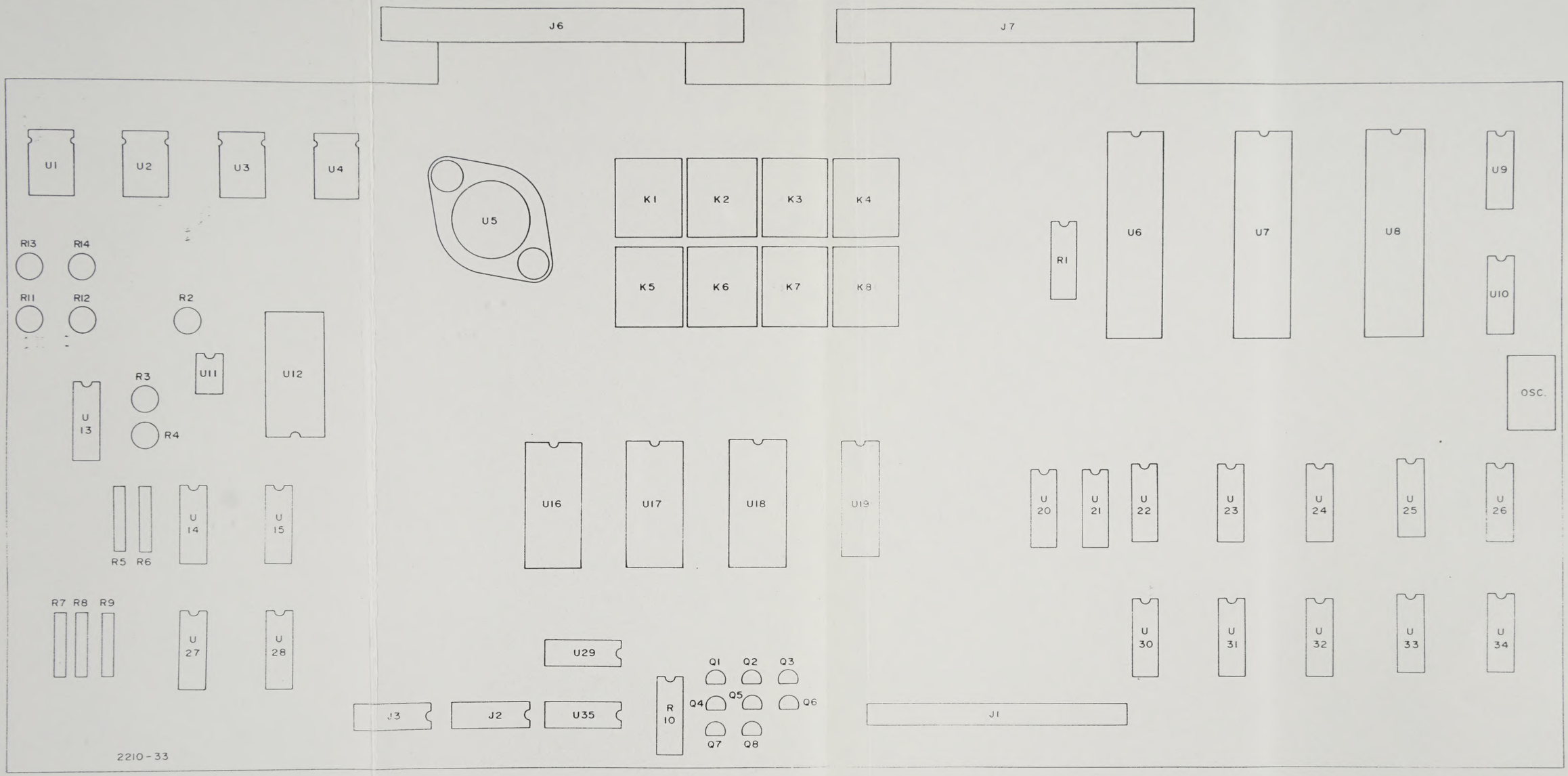

REVISION RECORD			
ISSUE	REV BY	APP BY	DATE
–	85-234	[illegible]	21 MAY 85
2B	85-621	[illegible]	24 JUN 85
2C	5-284	[illegible]	13/6/85
2D	5-376	[illegible]	26/8/85
3	5-336	[illegible]	19/11/85

THESE DRAWINGS AND SPECIFICATIONS ARE THE PROPERTY OF ROSS VIDEO LIMITED AND SHALL NOT BE REPRODUCED OR COPIED OR USED AS THE BASIS FOR THE MANUFACTURE OR SALE OF APPARATUS WITHOUT PERMISSION

ROSS VIDEO LIMITED

TITLE: PANEL CONTROL PCB

RVS 210

SCALE – TO – | PCB LAYOUT

DRAWN BY: D.W.R. | APPROVED BY: [illegible] | DATE: 23 Jan.'85

DRAWING NO: 2210-33

ISSUE 3 | SHEET 1 OF 1 SHEETS

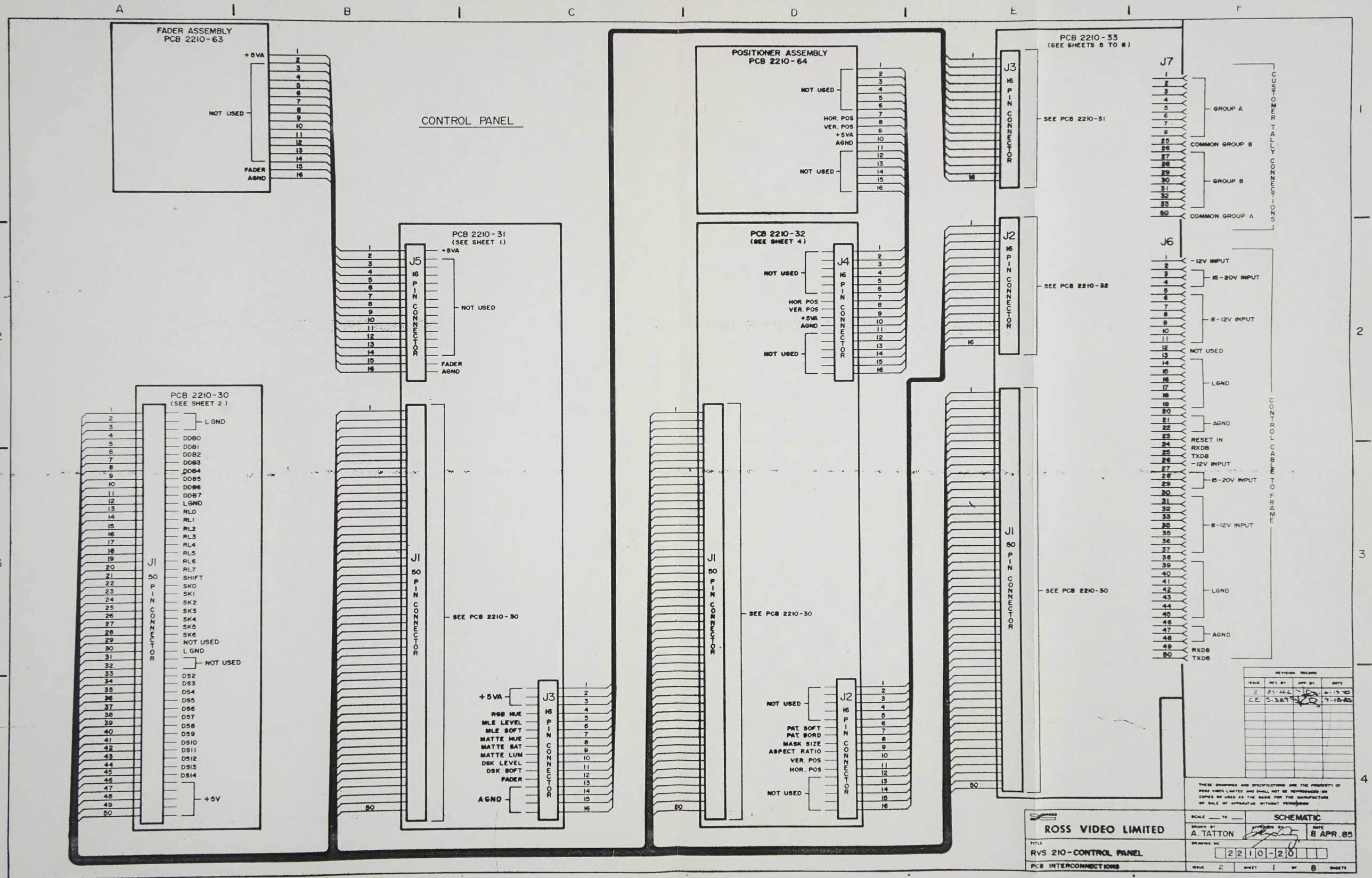
CONTROL PANEL
FADER ASSEMBLY
PCB 2210-63
+5VA
NOT USED
FADER
AGND
POSITIONER ASSEMBLY
PCB 2210-64
NOT USED
HOR. POS
VER. POS
+5VA
AGND
NOT USED
PCB 2210-31
(SEE SHEET 1)
J5
16 PIN CONNECTOR
+5VA
NOT USED
FADER
AGND
PCB 2210-32
(SEE SHEET 4)
J4
16 PIN CONNECTOR
NOT USED
HOR. POS
VER. POS
+5VA
AGND
NOT USED
PCB 2210-33
(SEE SHEETS 5 TO 8)
J3
16 PIN CONNECTOR
SEE PCB 2210-31
J2
16 PIN CONNECTOR
SEE PCB 2210-32
J1
50 PIN CONNECTOR
SEE PCB 2210-30
PCB 2210-30
(SEE SHEET 2)
J1
50 PIN CONNECTOR
L GND
DDB0
DDB1
DDB2
DDB3
DDB4
DDB5
DDB6
DDB7
L GND
RL0
RL1
RL2
RL3
RL4
RL5
RL6
RL7
SHIFT
SK0
SK1
SK2
SK3
SK4
SK5
SK6
NOT USED
L GND
NOT USED
DS2
DS3
DS4
DS5
DS6
DS7
DS8
DS9
DS10
DS11
DS12
DS13
DS14
+5V
J1
50 PIN CONNECTOR
SEE PCB 2210-30
+5VA
RGB HUE
MLE LEVEL
MLE SOFT
MATTE HUE
MATTE SAT
MATTE LUM
DSK LEVEL
DSK SOFT
FADER
AGND
J3
16 PIN CONNECTOR
J1
50 PIN CONNECTOR
SEE PCB 2210-30
NOT USED
PAT SOFT
PAT BORD
MASK SIZE
ASPECT RATIO
VER. POS
HOR. POS
NOT USED
J2
16 PIN CONNECTOR
J1
50 PIN CONNECTOR
SEE PCB 2210-30
J7
GROUP A
COMMON GROUP B
GROUP B
COMMON GROUP A
J6
-12V INPUT
15-20V INPUT
8-12V INPUT
NOT USED
LGND
AGND
RESET IN
RXDB
TXDB
-12V INPUT
15-20V INPUT
8-12V INPUT
LGND
AGND
RXDB
TXDB
CUSTOMER TALLY CONNECTIONS
CONTROL CABLE TO FRAME
REVISION RECORD
ISSUE
REV BY
APP BY
DATE
2
85-262
6-13-85
C.E.
5-389
9-18-85
THESE DRAWINGS AND SPECIFICATIONS ARE THE PROPERTY OF ROSS VIDEO LIMITED AND SHALL NOT BE REPRODUCED OR COPIED OR USED AS THE BASIS FOR THE MANUFACTURE OR SALE OF APPARATUS WITHOUT PERMISSION
ROSS VIDEO LIMITED
TITLE
RVS 210-CONTROL PANEL
PCB INTERCONNECTIONS
SCALE ___ TO ___
SCHEMATIC
DRAWN BY
A. TATTON
APPROVED BY
DATE
8 APR.85
DRAWING NO
2210-20
ISSUE 2
SHEET 1 OF 8 SHEETS

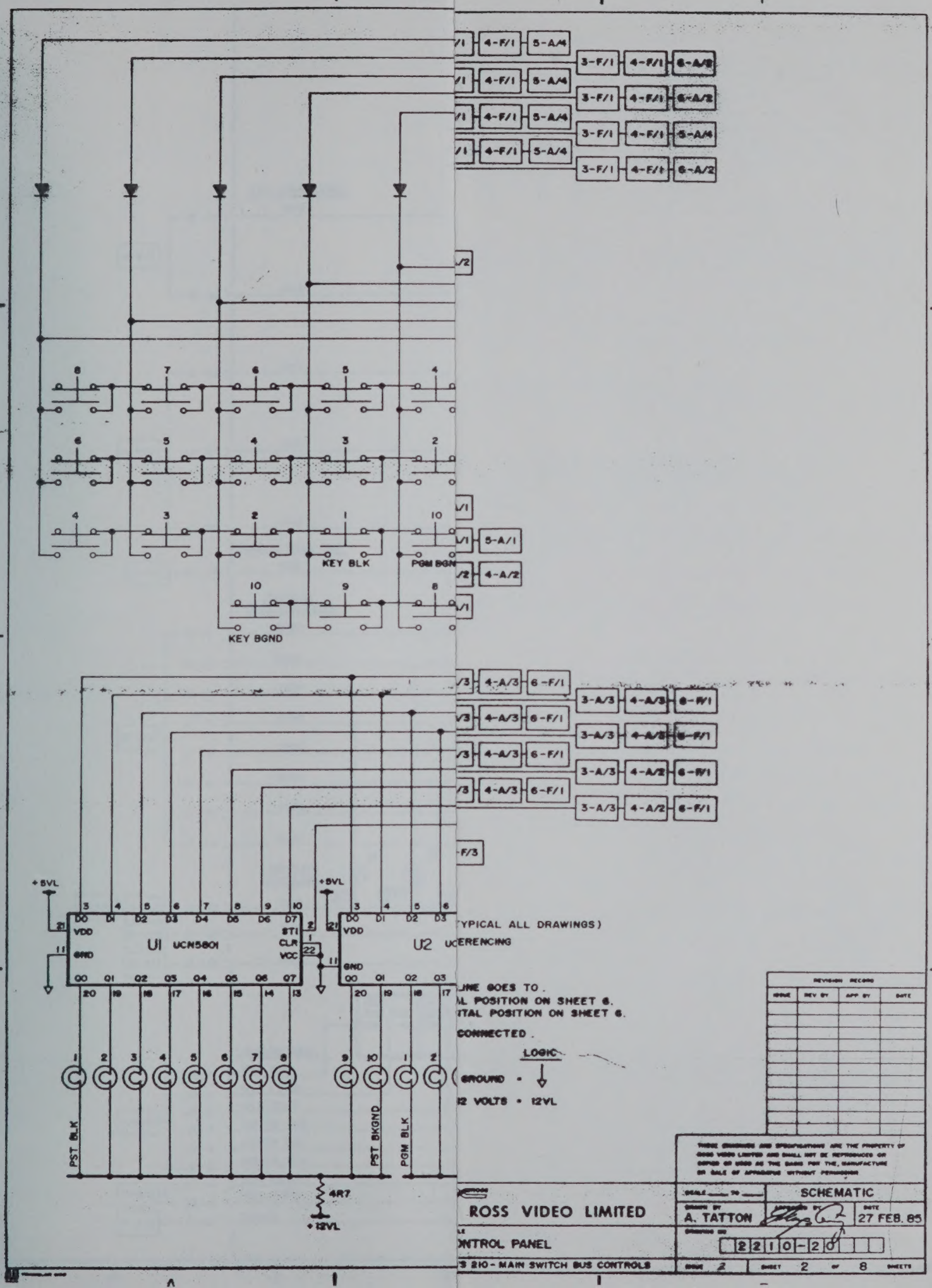
KEY BLK
PGM BGND
KEY BGND
U1 UCN5801
U2 UCN5801
+5VL
VDD
GND
STI
CLR
VCC
PST BLK
PST BKGND
PGM BLK
4R7
+12VL
(TYPICAL ALL DRAWINGS)
LOGIC
GROUND
12 VOLTS = 12VL
REVISION RECORD
SCHEMATIC
ROSS VIDEO LIMITED
A. TATTON
27 FEB. 85
2210-20
CONTROL PANEL
2210 - MAIN SWITCH BUS CONTROLS
SHEET 2 OF 8 SHEETS

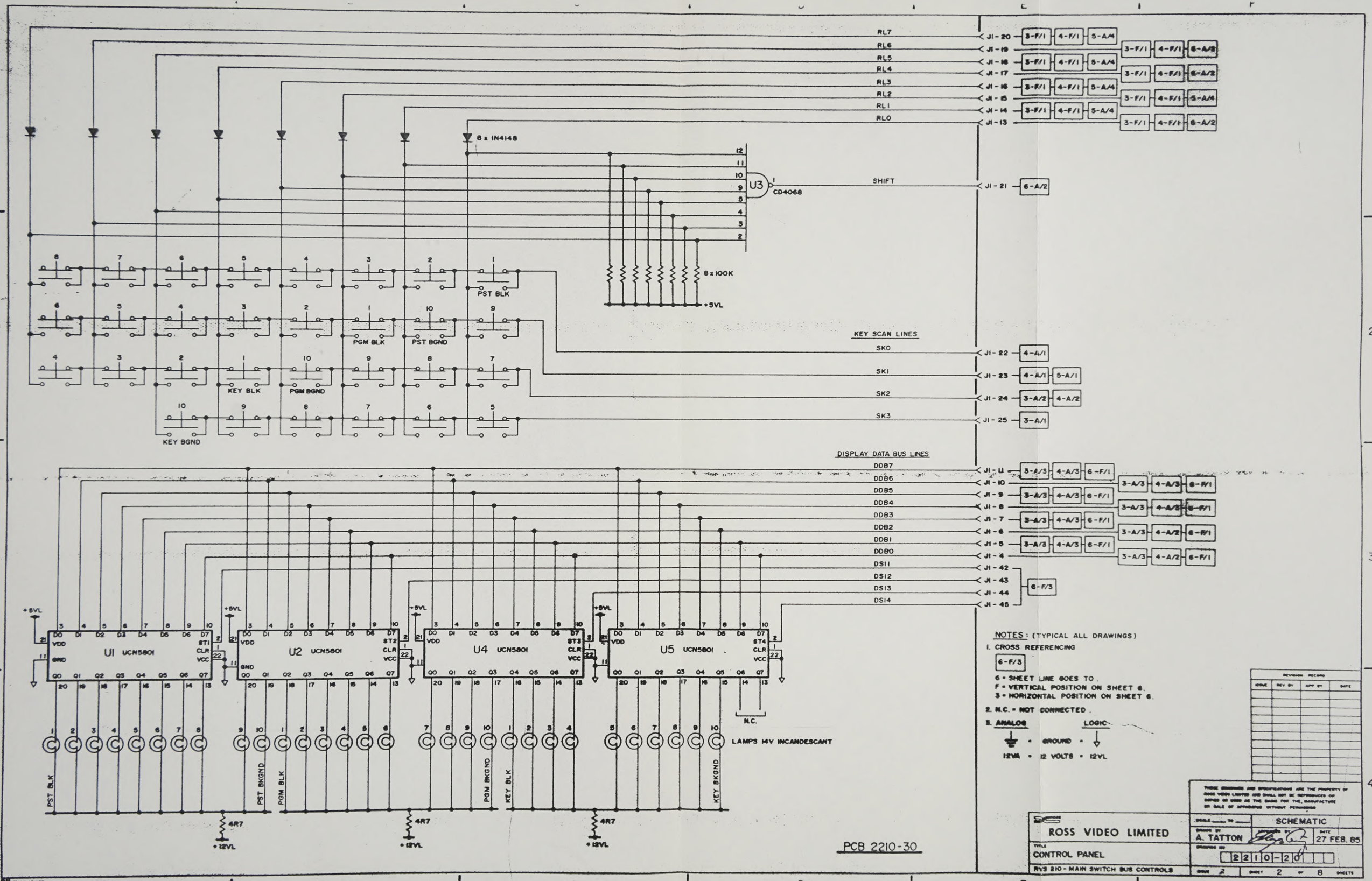
RL7
RL6
RL5
RL4
RL3
RL2
RL1
RL0
J1-20
J1-19
J1-18
J1-17
J1-16
J1-15
J1-14
J1-13
3-F/1
4-F/1
5-A/4
6-A/2
8 x IN4148
U3
CD4068
SHIFT
J1-21
8 x 100K
+5VL
PST BLK
PGM BLK
PST BGND
KEY BLK
PGM BGND
KEY BGND
KEY SCAN LINES
SK0
SK1
SK2
SK3
J1-22
J1-23
J1-24
J1-25
4-A/1
5-A/1
3-A/2
4-A/2
3-A/1
DISPLAY DATA BUS LINES
DDB7
DDB6
DDB5
DDB4
DDB3
DDB2
DDB1
DDB0
DSI1
DSI2
DSI3
DSI4
J1-11
J1-10
J1-9
J1-8
J1-7
J1-6
J1-5
J1-4
J1-42
J1-43
J1-44
J1-45
3-A/3
4-A/3
6-F/1
4-A/2
6-F/3
U1 UCN5801
U2 UCN5801
U4 UCN5801
U5 UCN5801
+5VL
N.C.
LAMPS 14V INCANDESCANT
PST BLK
PST BKGND
PGM BLK
PGM BKGND
KEY BLK
KEY BKGND
4R7
+12VL
PCB 2210-30
NOTES: (TYPICAL ALL DRAWINGS)
1. CROSS REFERENCING
6-F/3
6 = SHEET LINE GOES TO.
F = VERTICAL POSITION ON SHEET 6.
3 = HORIZONTAL POSITION ON SHEET 6.
2. N.C. = NOT CONNECTED.
3. ANALOG
LOGIC
GROUND
12VA = 12 VOLTS = 12VL
REVISION RECORD
ROSS VIDEO LIMITED
CONTROL PANEL
RVS 210 - MAIN SWITCH BUS CONTROLS
SCHEMATIC
A. TATTON
27 FEB. 85
2210-20
SHEET 2 OF 8 SHEETS

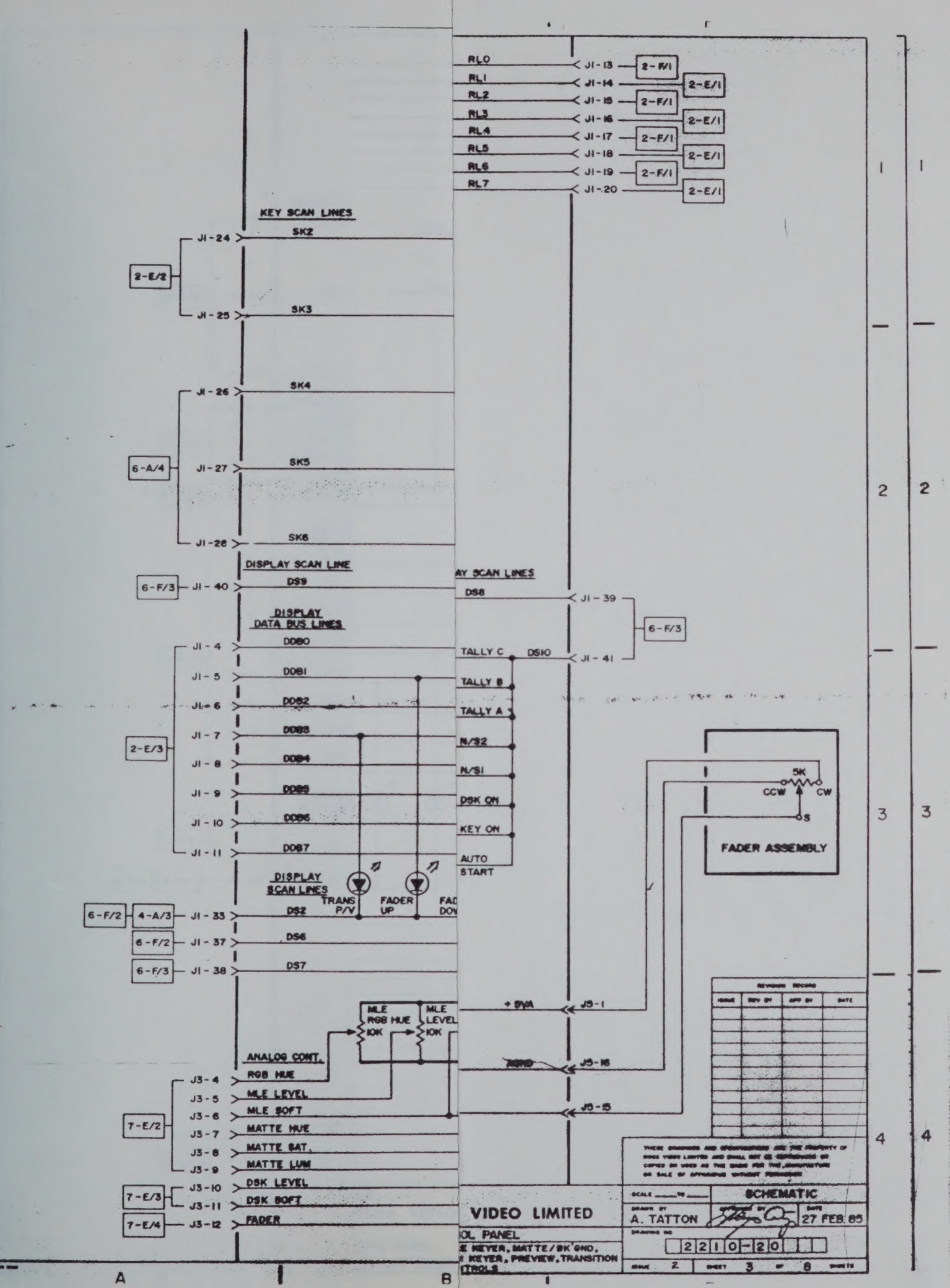
RL0
RL1
RL2
RL3
RL4
RL5
RL6
RL7
J1-13
J1-14
J1-15
J1-16
J1-17
J1-18
J1-19
J1-20
2-F/1
2-E/1
KEY SCAN LINES
J1-24
SK2
2-E/2
J1-25
SK3
J1-26
SK4
6-A/4
J1-27
SK5
J1-28
SK6
DISPLAY SCAN LINE
6-F/3
J1-40
DS9
DISPLAY DATA BUS LINES
J1-4
DDB0
J1-5
DDB1
J1-6
DDB2
J1-7
DDB3
2-E/3
J1-8
DDB4
J1-9
DDB5
J1-10
DDB6
J1-11
DDB7
DISPLAY SCAN LINES
TRANS P/V
FADER UP
6-F/2
4-A/3
J1-33
DS2
6-F/2
J1-37
DS6
6-F/3
J1-38
DS7
AY SCAN LINES
DS8
J1-39
6-F/3
TALLY C
DS10
J1-41
TALLY B
TALLY A
N/S2
N/S1
DSK ON
KEY ON
AUTO START
5K
CCW
CW
S
FADER ASSEMBLY
MLE RGB HUE 10K
MLE LEVEL 10K
+5VA
J5-1
ANALOG CONT.
J5-16
J3-4
RGB HUE
J3-5
MLE LEVEL
J3-6
MLE SOFT
J5-15
7-E/2
J3-7
MATTE HUE
J3-8
MATTE SAT.
J3-9
MATTE LUM
J3-10
DSK LEVEL
7-E/3
J3-11
DSK SOFT
7-E/4
J3-12
FADER
VIDEO LIMITED
OL PANEL
E KEYER, MATTE/BK GND,
KEYER, PREVIEW, TRANSITION
TROLS
SCHEMATIC
A. TATTON
27 FEB 85
2210-20
2
3
8
A
B

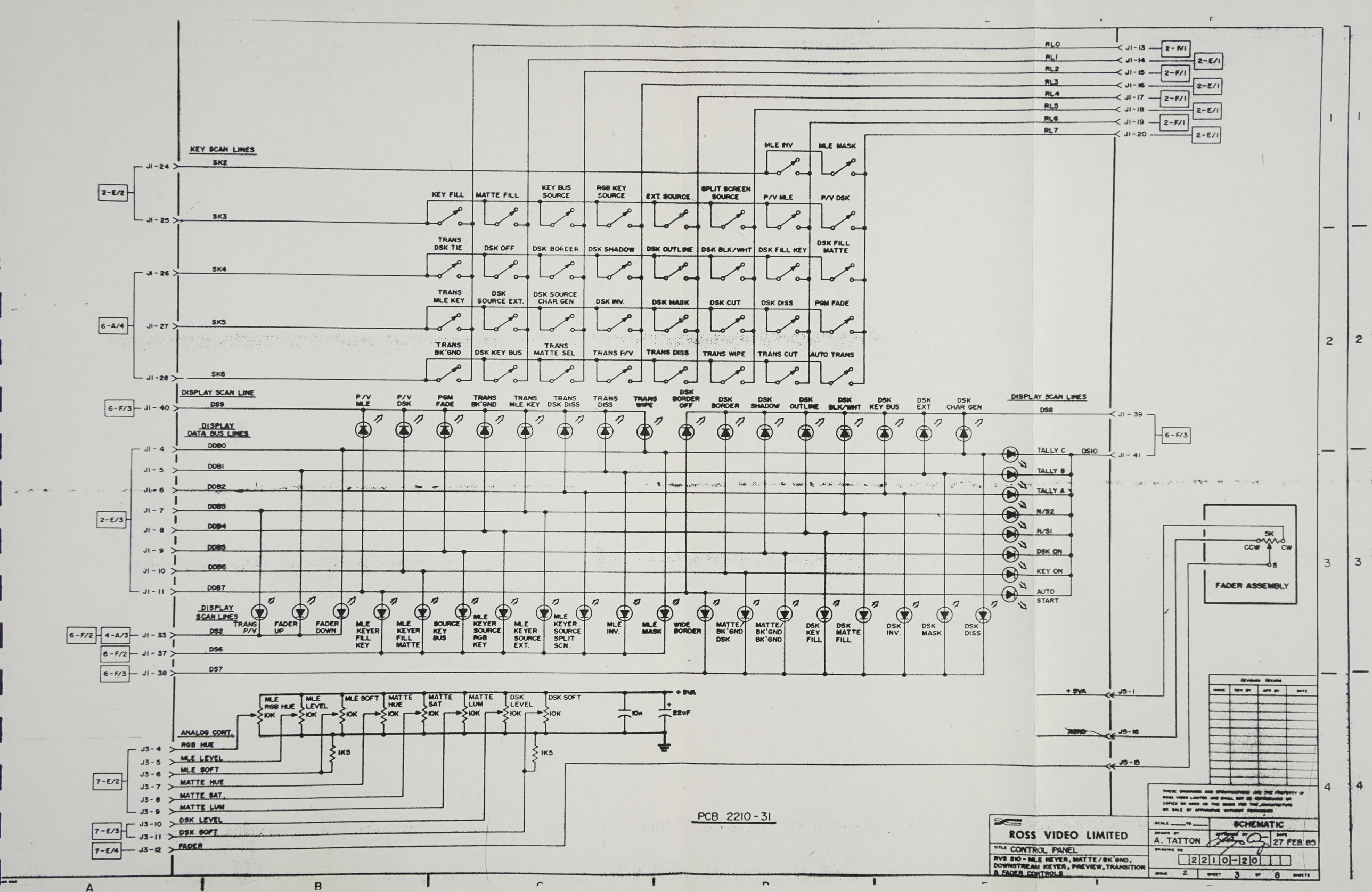
KEY SCAN LINES
SK2
SK3
SK4
SK5
SK6
KEY FILL
MATTE FILL
KEY BUS SOURCE
RGB KEY SOURCE
EXT SOURCE
SPLIT SCREEN SOURCE
P/V MLE
P/V DSK
MLE INV
MLE MASK
TRANS DSK TIE
DSK OFF
DSK BORDER
DSK SHADOW
DSK OUTLINE
DSK BLK/WHT
DSK FILL KEY
DSK FILL MATTE
TRANS MLE KEY
DSK SOURCE EXT.
DSK SOURCE CHAR. GEN
DSK INV.
DSK MASK
DSK CUT
DSK DISS
PGM FADE
TRANS BK'GND
DSK KEY BUS
TRANS MATTE SEL
TRANS P/V
TRANS DISS
TRANS WIPE
TRANS CUT
AUTO TRANS
RL0
RL1
RL2
RL3
RL4
RL5
RL6
RL7
DISPLAY SCAN LINE
DS9
DISPLAY DATA BUS LINES
DDB0
DDB1
DDB2
DDB3
DDB4
DDB5
DDB6
DDB7
DISPLAY SCAN LINES
DS8
DS10
DISPLAY SCAN LINES
DS2
DS6
DS7
TRANS P/V
FADER UP
FADER DOWN
MLE KEYER FILL KEY
MLE KEYER FILL MATTE
SOURCE KEY BUS
MLE KEYER SOURCE RGB KEY
MLE KEYER SOURCE EXT.
MLE KEYER SOURCE SPLIT SCN.
MLE INV.
MLE MASK
WIDE BORDER
MATTE/BK'GND DSK
MATTE/BK'GND BK'GND
DSK KEY FILL
DSK MATTE FILL
DSK INV.
DSK MASK
DSK DISS
TALLY C
TALLY B
TALLY A
N/S2
N/S1
DSK ON
KEY ON
AUTO START
5K
CCW
CW
S
FADER ASSEMBLY
+5VA
GND
ANALOG CONT.
RGB HUE
MLE LEVEL
MLE SOFT
MATTE HUE
MATTE SAT.
MATTE LUM
DSK LEVEL
DSK SOFT
FADER
MLE RGB HUE
MLE LEVEL
MLE SOFT
MATTE HUE
MATTE SAT
MATTE LUM
DSK LEVEL
DSK SOFT
10K
1K5
10n
22uF
PCB 2210-31
ROSS VIDEO LIMITED
TITLE CONTROL PANEL
RVS 210 - MLE KEYER, MATTE/BK'GND, DOWNSTREAM KEYER, PREVIEW, TRANSITION & FADER CONTROLS
SCHEMATIC
A. TATTON
27 FEB. 85
2210-20
ISSUE 2
SHEET 3 OF 8 SHEETS

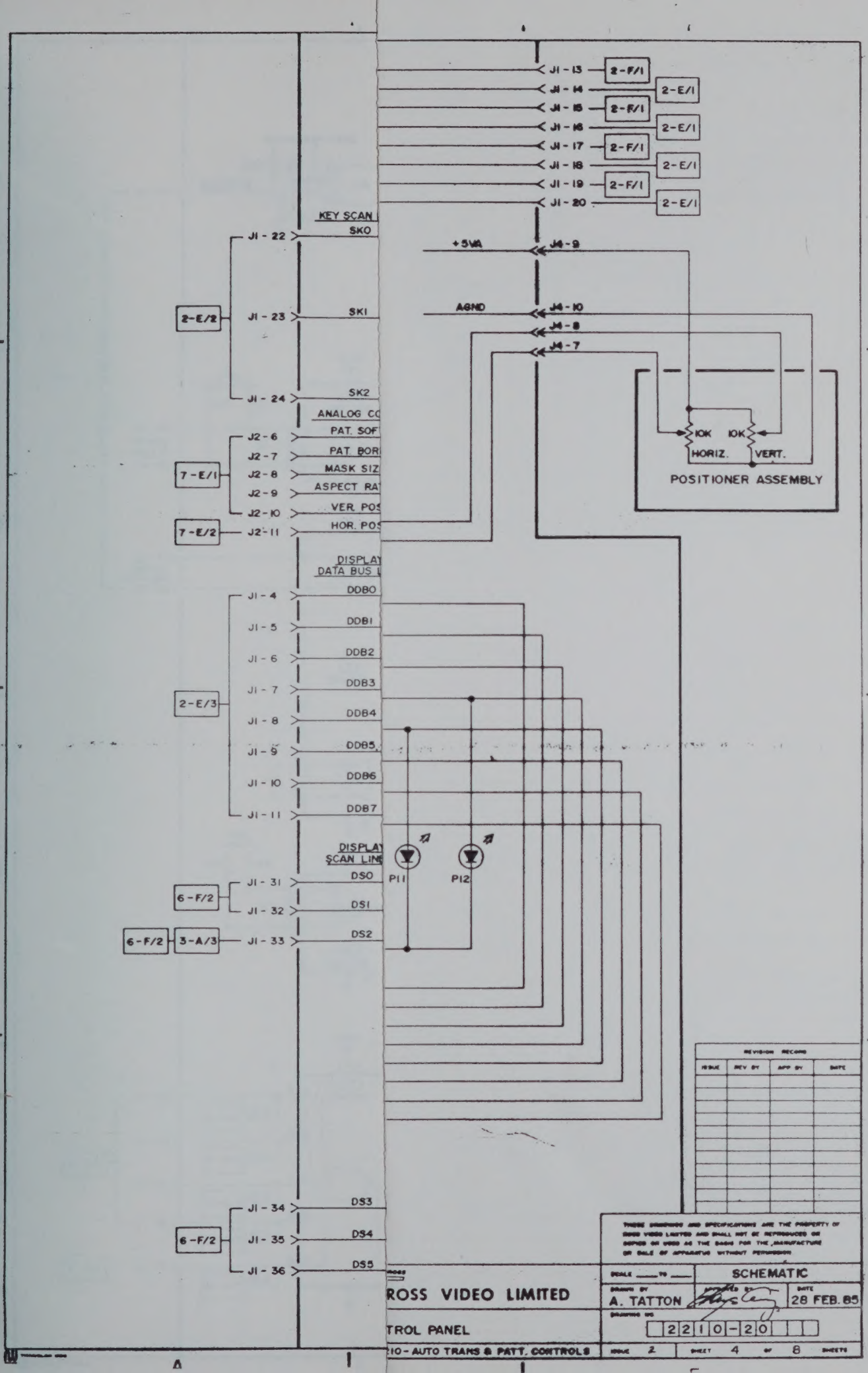
J1 - 13
2-F/1
J1 - 14
2-E/1
J1 - 15
2-F/1
J1 - 16
2-E/1
J1 - 17
2-F/1
J1 - 18
2-E/1
J1 - 19
2-F/1
J1 - 20
2-E/1
KEY SCAN
J1 - 22
SK0
+5VA
J4 - 9
2-E/2
J1 - 23
SK1
AGND
J4 - 10
J4 - 8
J4 - 7
J1 - 24
SK2
ANALOG CO
PAT. SOF
PAT. BOR
MASK SIZ
ASPECT RA
VER. POS
HOR. POS
J2 - 6
J2 - 7
J2 - 8
J2 - 9
J2 - 10
J2 - 11
7-E/1
7-E/2
10K
10K
HORIZ.
VERT.
POSITIONER ASSEMBLY
DISPLAY
DATA BUS
J1 - 4
J1 - 5
J1 - 6
J1 - 7
J1 - 8
J1 - 9
J1 - 10
J1 - 11
DDB0
DDB1
DDB2
DDB3
DDB4
DDB5
DDB6
DDB7
2-E/3
DISPLAY
SCAN LINE
P11
P12
J1 - 31
J1 - 32
J1 - 33
DS0
DS1
DS2
6-F/2
6-F/2
3-A/3
J1 - 34
J1 - 35
J1 - 36
DS3
DS4
DS5
6-F/2
REVISION RECORD
ISSUE
REV BY
APP BY
DATE
THESE DRAWINGS AND SPECIFICATIONS ARE THE PROPERTY OF ROSS VIDEO LIMITED AND SHALL NOT BE REPRODUCED OR COPIED OR USED AS THE BASIS FOR THE MANUFACTURE OR SALE OF APPARATUS WITHOUT PERMISSION
ROSS VIDEO LIMITED
TROL PANEL
10 - AUTO TRANS & PATT. CONTROLS
SCHEMATIC
A. TATTON
28 FEB. 85
2210-20
ISSUE 2
SHEET 4 OF 8 SHEETS

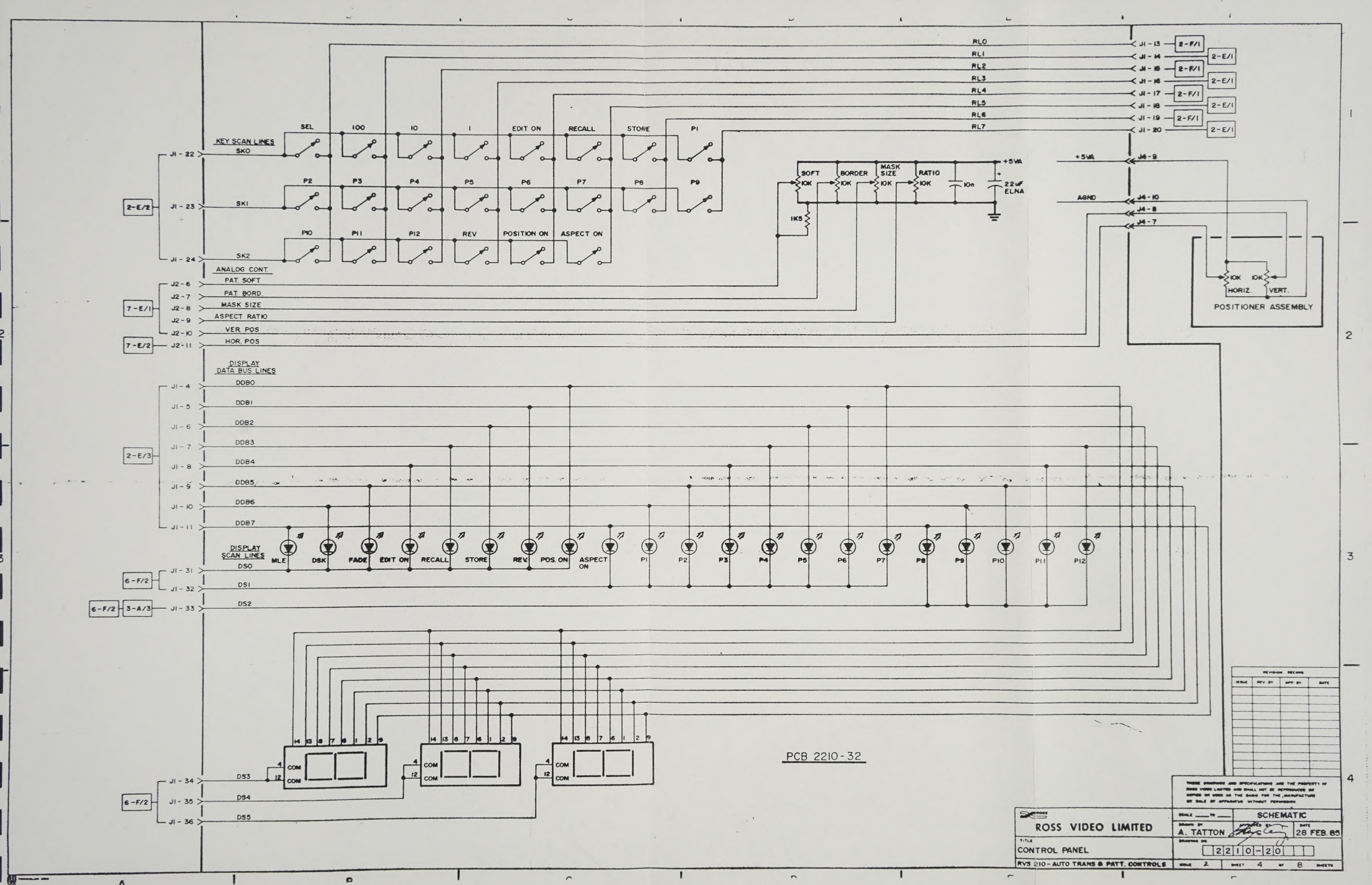
KEY SCAN LINES
SK0
SK1
SK2
J1 - 22
J1 - 23
J1 - 24
2-E/2
SEL
100
10
1
EDIT ON
RECALL
STORE
P1
P2
P3
P4
P5
P6
P7
P8
P9
P10
P11
P12
REV
POSITION ON
ASPECT ON
RL0
RL1
RL2
RL3
RL4
RL5
RL6
RL7
J1 - 13
J1 - 14
J1 - 15
J1 - 16
J1 - 17
J1 - 18
J1 - 19
J1 - 20
2-F/1
2-E/1
SOFT
BORDER
MASK SIZE
RATIO
10K
1K5
10n
22uF
ELNA
+5VA
AGND
J4 - 9
J4 - 10
J4 - 8
J4 - 7
HORIZ.
VERT.
POSITIONER ASSEMBLY
ANALOG CONT.
PAT. SOFT
PAT. BORD.
MASK SIZE
ASPECT RATIO
VER. POS
HOR. POS
J2 - 6
J2 - 7
J2 - 8
J2 - 9
J2 - 10
J2 - 11
7-E/1
7-E/2
DISPLAY DATA BUS LINES
DDB0
DDB1
DDB2
DDB3
DDB4
DDB5
DDB6
DDB7
J1 - 4
J1 - 5
J1 - 6
J1 - 7
J1 - 8
J1 - 9
J1 - 10
J1 - 11
2-E/3
DISPLAY SCAN LINES
DS0
DS1
DS2
DS3
DS4
DS5
J1 - 31
J1 - 32
J1 - 33
J1 - 34
J1 - 35
J1 - 36
6-F/2
3-A/3
MLE
DSK
FADE
EDIT ON
RECALL
STORE
REV.
POS. ON
ASPECT ON
COM
PCB 2210-32
REVISION RECORD
ISSUE
REV BY
APP BY
DATE
THESE DRAWINGS AND SPECIFICATIONS ARE THE PROPERTY OF ROSS VIDEO LIMITED AND SHALL NOT BE REPRODUCED OR COPIED OR USED AS THE BASIS FOR THE MANUFACTURE OR SALE OF APPARATUS WITHOUT PERMISSION
ROSS VIDEO LIMITED
SCHEMATIC
A. TATTON
28 FEB. 85
CONTROL PANEL
2210-20
RVS 210 - AUTO TRANS & PATT. CONTROLS
ISSUE 2
SHEET 4 OF 8 SHEETS

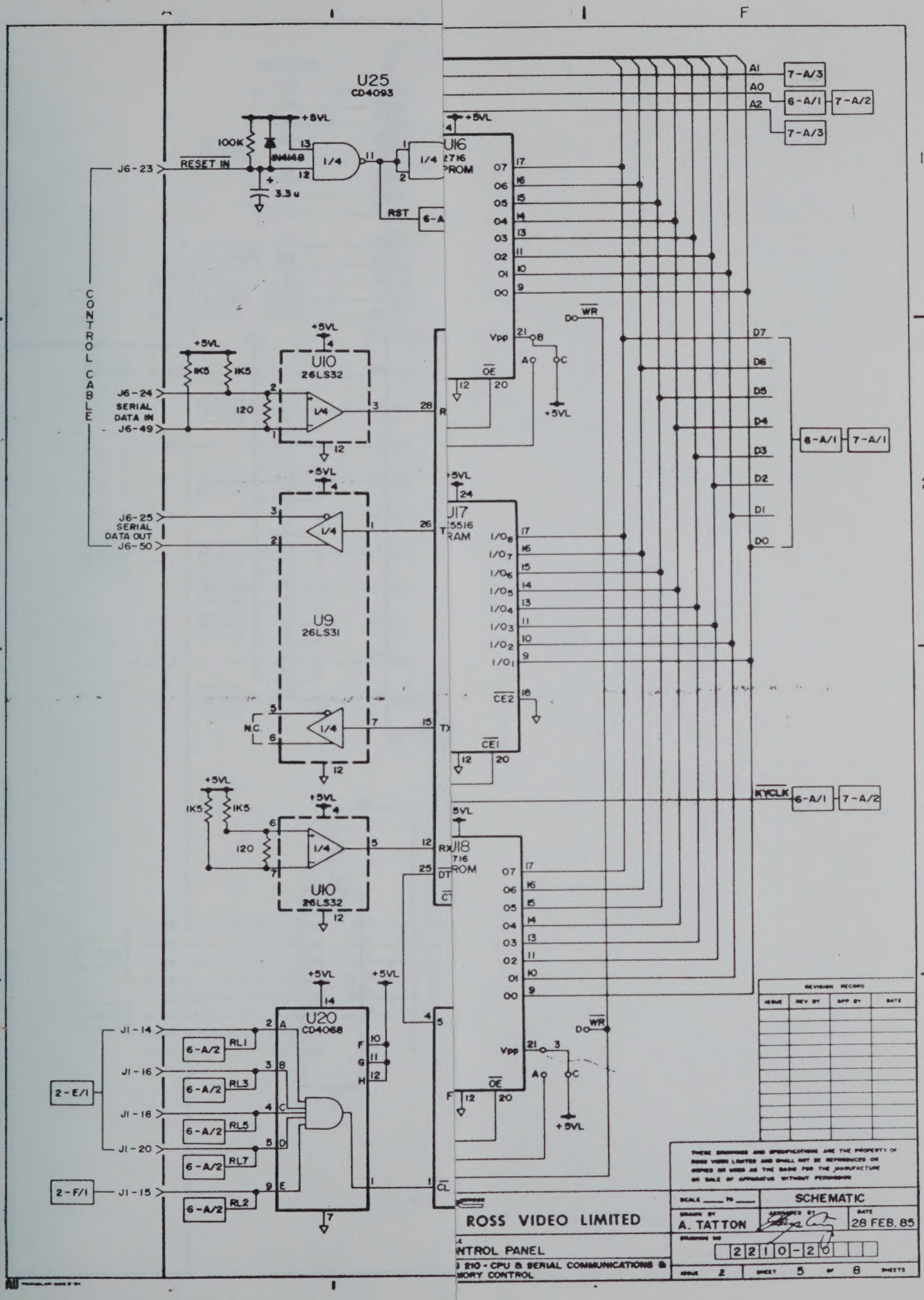
U25
CD4093
+5VL
100K
1N4148
3.3u
RESET IN
J6-23
1/4
RST
6-A
U16
2716
PROM
Vpp
OE
WR
CONTROL CABLE
J6-24
SERIAL DATA IN
J6-49
1K5
120
U10
26LS32
J6-25
SERIAL DATA OUT
J6-50
U9
26LS31
N.C.
U17
5516
RAM
CE2
CE1
KYCLK
6-A/1
7-A/2
U18
716
ROM
DT
CL
U20
CD4068
J1-14
J1-16
J1-18
J1-20
J1-15
2-E/1
2-F/1
6-A/2
RL1
RL3
RL5
RL7
RL2
A1
A0
A2
7-A/3
7-A/2
D7
D6
D5
D4
D3
D2
D1
D0
REVISION RECORD
ISSUE
REV BY
APP BY
DATE
THESE DRAWINGS AND SPECIFICATIONS ARE THE PROPERTY OF ROSS VIDEO LIMITED AND SHALL NOT BE REPRODUCED OR COPIED OR USED AS THE BASIS FOR THE MANUFACTURE OR SALE OF APPARATUS WITHOUT PERMISSION
ROSS VIDEO LIMITED
NTROL PANEL
210 - CPU & SERIAL COMMUNICATIONS & MORY CONTROL
SCHEMATIC
A. TATTON
28 FEB. 85
2210-20
ISSUE 2
SHEET 5 OF 8 SHEETS

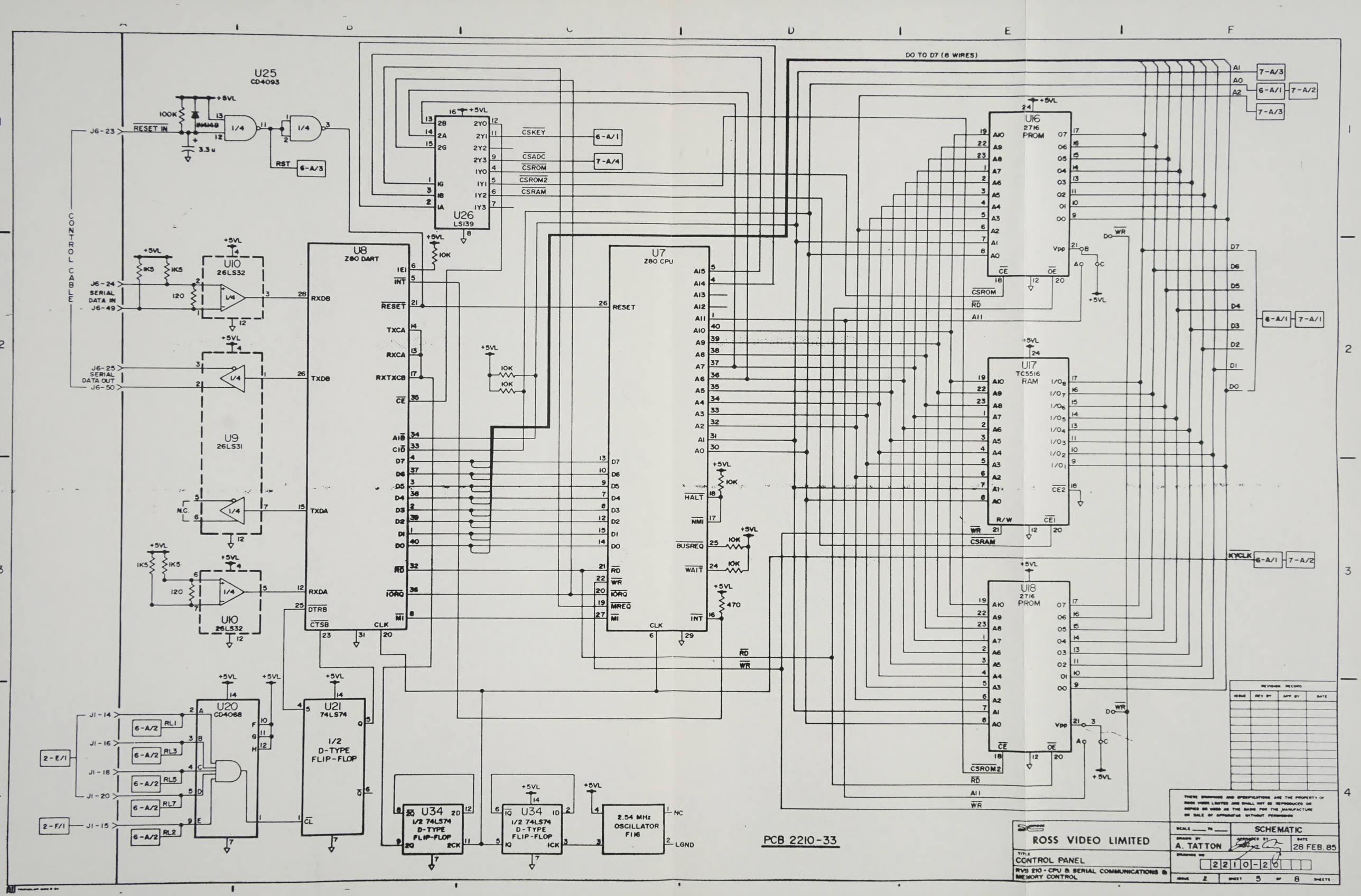
U25
CD4093
U26
LS139
U8
Z80 DART
U7
Z80 CPU
U16
2716
PROM
U17
TC5516
RAM
U18
2716
PROM
U10
26LS32
U9
26LS31
U20
CD4068
U21
74LS74
1/2
D-TYPE
FLIP-FLOP
U34
1/2 74LS74
D-TYPE
FLIP-FLOP
2.54 MHz
OSCILLATOR
F116
CONTROL CABLE
D0 TO D7 (8 WIRES)
RESET IN
SERIAL
DATA IN
SERIAL
DATA OUT
PCB 2210-33
ROSS VIDEO LIMITED
CONTROL PANEL
RV3 210 - CPU & SERIAL COMMUNICATIONS & MEMORY CONTROL
SCHEMATIC
A. TATTON
28 FEB. 85
2210-20
ISSUE 2
SHEET 5 OF 8 SHEETS

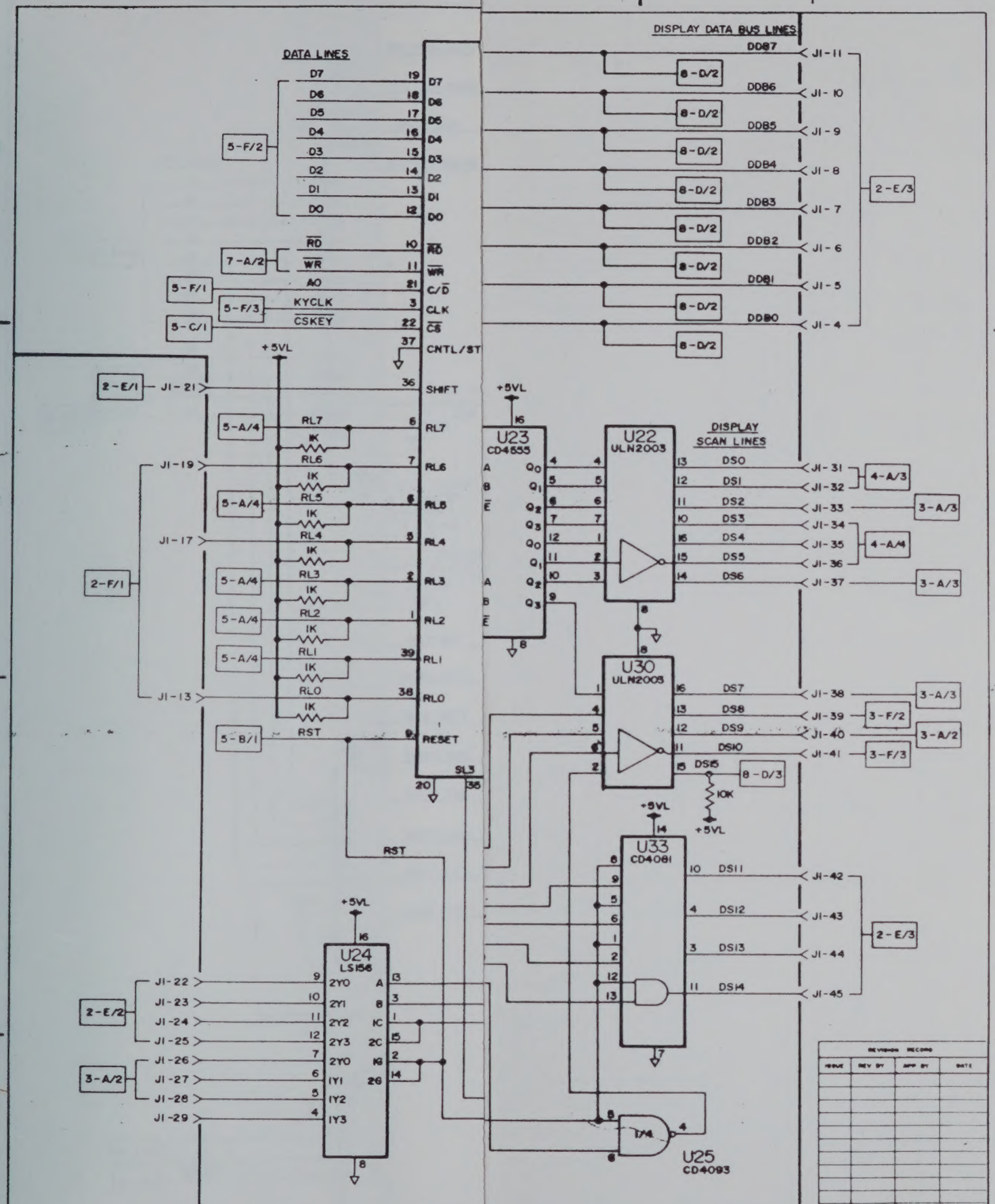
DATA LINES
D7
D6
D5
D4
D3
D2
D1
D0
RD
WR
A0
KYCLK
CSKEY
CNTL/ST
SHIFT
RL7
RL6
RL5
RL4
RL3
RL2
RL1
RL0
RST
RESET
SL3
C/D
CLK
CS
+5VL
1K
5-F/2
7-A/2
5-F/1
5-F/3
5-C/1
2-E/1
5-A/4
2-F/1
5-B/1
J1-21
J1-19
J1-17
J1-13
DISPLAY DATA BUS LINES
DDB7
DDB6
DDB5
DDB4
DDB3
DDB2
DDB1
DDB0
8-D/2
J1-11
J1-10
J1-9
J1-8
J1-7
J1-6
J1-5
J1-4
2-E/3
U23
CD4555
U22
ULN2003
U30
ULN2003
DISPLAY
SCAN LINES
DS0
DS1
DS2
DS3
DS4
DS5
DS6
DS7
DS8
DS9
DS10
DS15
DS11
DS12
DS13
DS14
J1-31
J1-32
J1-33
J1-34
J1-35
J1-36
J1-37
J1-38
J1-39
J1-40
J1-41
J1-42
J1-43
J1-44
J1-45
4-A/3
3-A/3
4-A/4
3-F/2
3-A/2
3-F/3
8-D/3
10K
U33
CD4081
U24
LS156
2Y0
2Y1
2Y2
2Y3
2Y0
1Y1
1Y2
1Y3
J1-22
J1-23
J1-24
J1-25
J1-26
J1-27
J1-28
J1-29
2-E/2
3-A/2
U25
CD4093
1/4
REVISION RECORD
ISSUE
REV BY
APP BY
DATE
THESE DRAWINGS AND SPECIFICATIONS ARE THE PROPERTY OF ROSS VIDEO LIMITED AND SHALL NOT BE REPRODUCED OR COPIED OR USED AS THE BASIS FOR THE MANUFACTURE OR SALE OF APPARATUS WITHOUT PERMISSION
ROSS VIDEO LIMITED
SCALE ___ TO ___
SCHEMATIC
DRAWN BY
A. TATTON
APPROVED BY
DATE
4 MAR. 85
DRAWING NO
2210-20
ONTROL PANEL
S 210 - KEYBOARD DISPLAY CONTROLLER
ISSUE 2
SHEET 6 OF 8 SHEETS

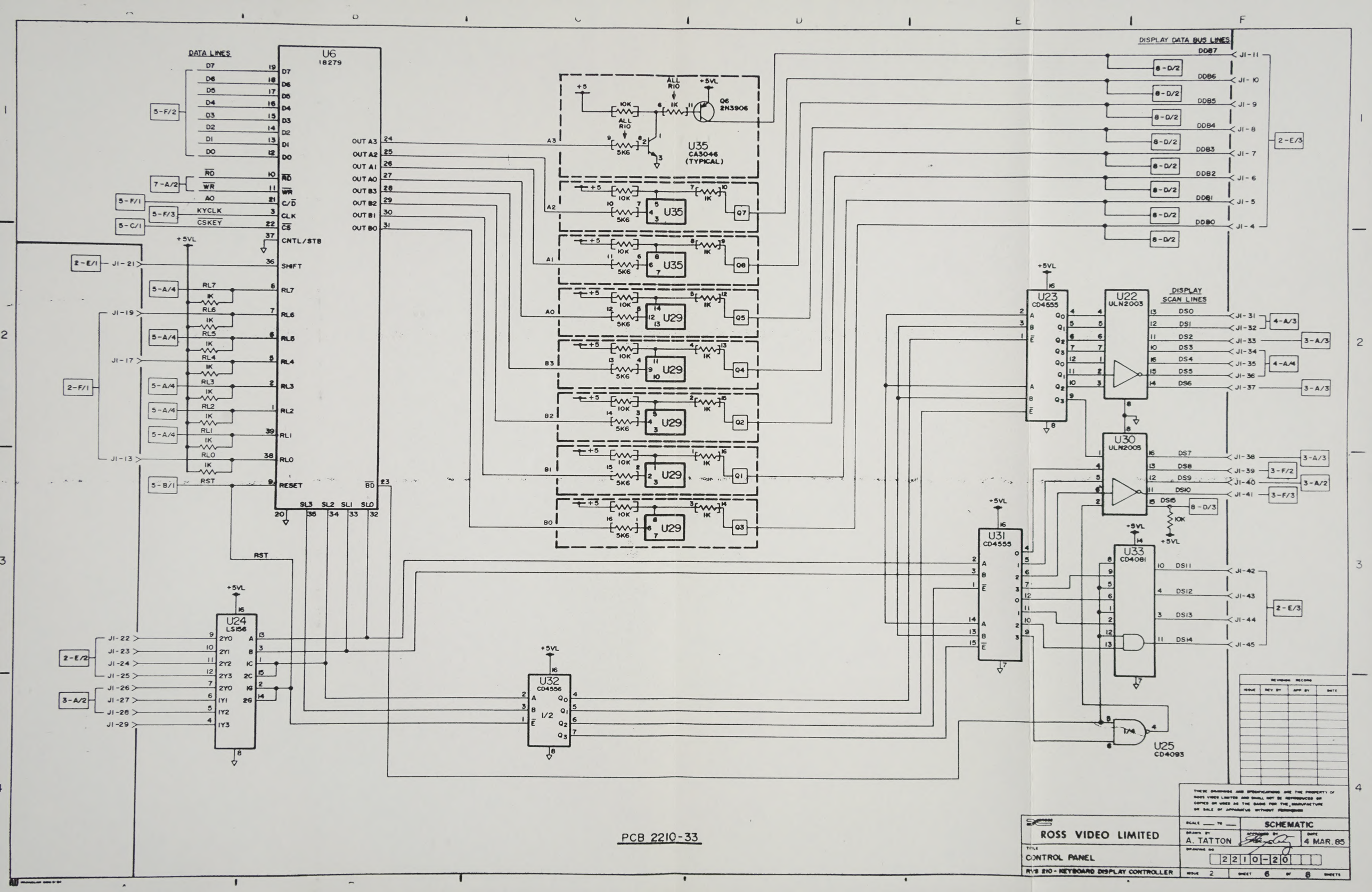
DATA LINES
U6
18279
U35
CA3046
(TYPICAL)
Q6
2N3906
U29
U24
LS156
U32
CD4556
U23
CD4555
U22
ULN2003
U30
ULN2003
U31
CD4555
U33
CD4081
U25
CD4093
DISPLAY DATA BUS LINES
DISPLAY
SCAN LINES
REVISION RECORD
THESE DRAWINGS AND SPECIFICATIONS ARE THE PROPERTY OF ROSS VIDEO LIMITED AND SHALL NOT BE REPRODUCED OR COPIED OR USED AS THE BASIS FOR THE MANUFACTURE OR SALE OF APPARATUS WITHOUT PERMISSION
ROSS VIDEO LIMITED
TITLE
CONTROL PANEL
RVS 210 - KEYBOARD DISPLAY CONTROLLER
SCHEMATIC
DRAWN BY
A. TATTON
DATE
4 MAR. 85
DRAWING NO
221 0-20
ISSUE 2
SHEET 6 OF 8 SHEETS

PCB 2210-33

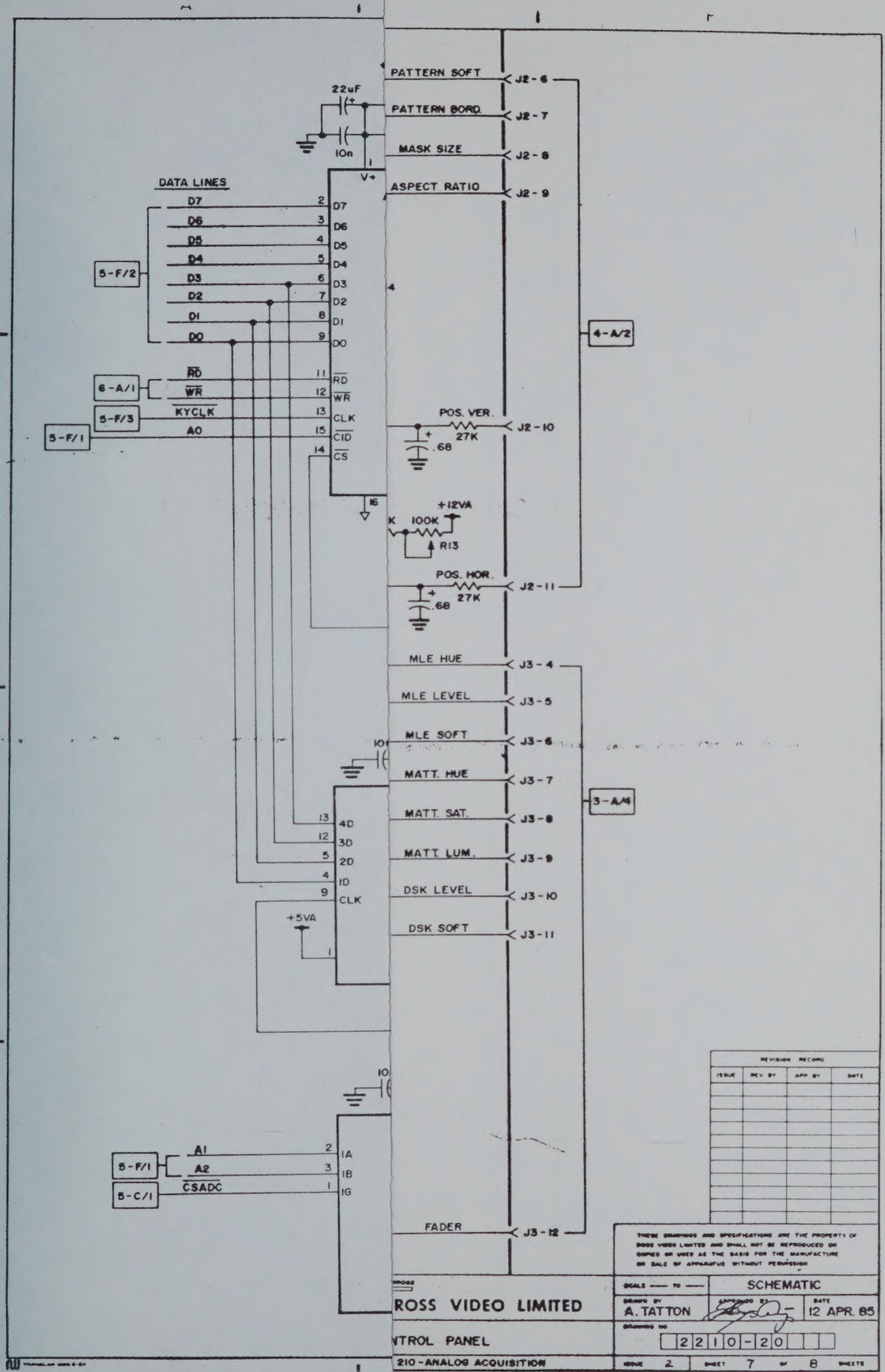
PATTERN SOFT
J2-6
PATTERN BORD.
J2-7
MASK SIZE
J2-8
ASPECT RATIO
J2-9
22uF
10n
V+
DATA LINES
D7
D6
D5
D4
D3
D2
D1
D0
5-F/2
RD
WR
6-A/1
KYCLK
5-F/3
A0
5-F/1
CLK
CID
CS
4-A/2
POS. VER.
27K
.68
J2-10
+12VA
100K
R13
POS. HOR.
J2-11
MLE HUE
J3-4
MLE LEVEL
J3-5
MLE SOFT
J3-6
MATT. HUE
J3-7
MATT. SAT.
J3-8
MATT. LUM.
J3-9
DSK LEVEL
J3-10
DSK SOFT
J3-11
3-A/4
4D
3D
2D
1D
CLK
+5VA
A1
A2
CSADC
5-F/1
5-C/1
1A
1B
1G
FADER
J3-12
REVISION RECORD
ISSUE
REV BY
APP BY
DATE
THESE DRAWINGS AND SPECIFICATIONS ARE THE PROPERTY OF ROSS VIDEO LIMITED AND SHALL NOT BE REPRODUCED OR COPIED OR USED AS THE BASIS FOR THE MANUFACTURE OR SALE OF APPARATUS WITHOUT PERMISSION
ROSS VIDEO LIMITED
NTROL PANEL
210-ANALOG ACQUISITION
SCHEMATIC
A. TATTON
12 APR. 85
22 10-20
ISSUE 2
SHEET 7 OF 8 SHEETS

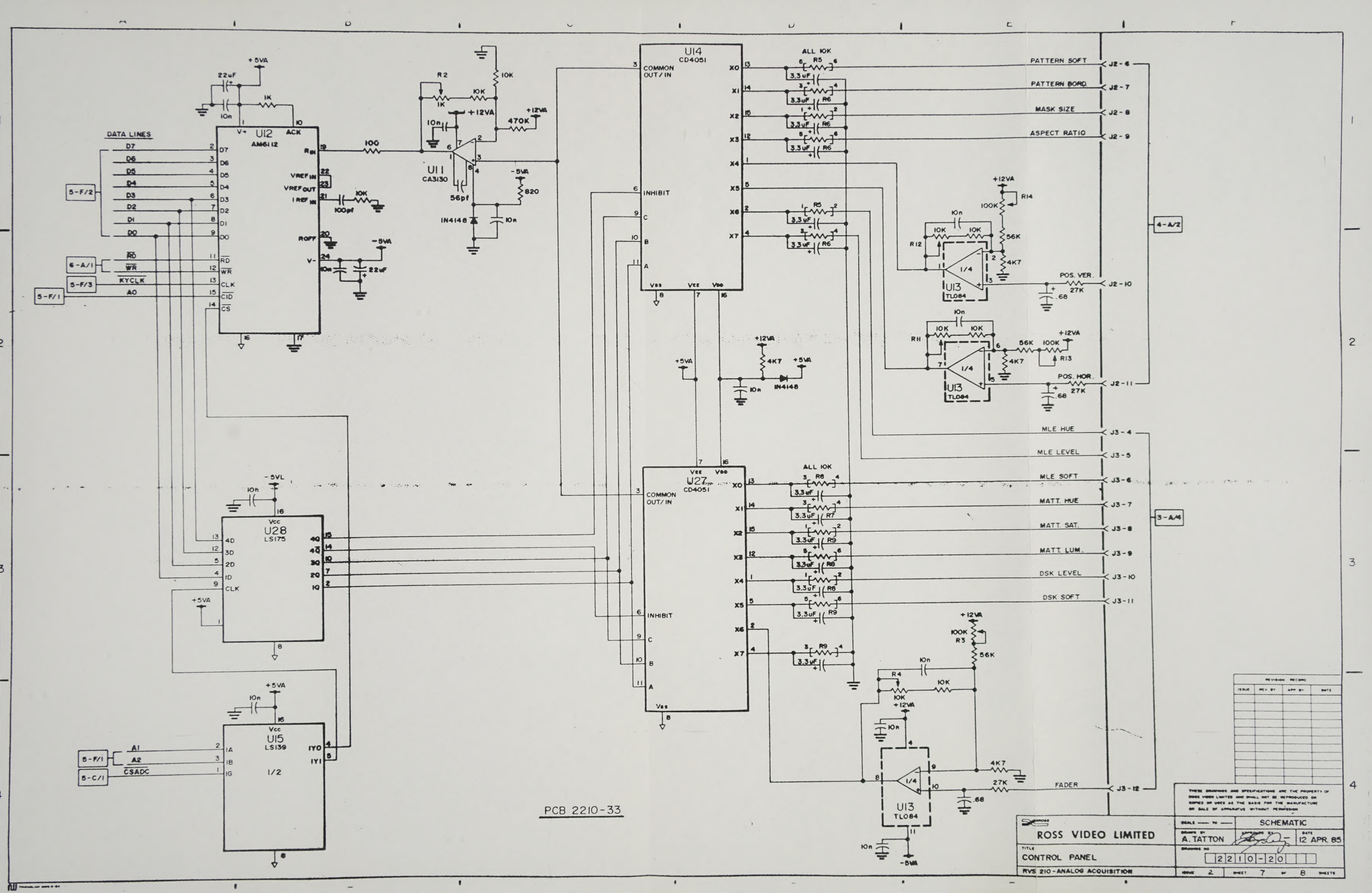
U12
AM6112
U11
CA3130
U14
CD4051
U27
CD4051
U28
LS175
U15
LS139
1/2
U13
TL084
DATA LINES
PATTERN SOFT
PATTERN BORD.
MASK SIZE
ASPECT RATIO
POS. VER.
POS. HOR.
MLE HUE
MLE LEVEL
MLE SOFT
MATT. HUE
MATT. SAT.
MATT. LUM.
DSK LEVEL
DSK SOFT
FADER
ALL 10K
COMMON OUT/IN
INHIBIT
PCB 2210-33
ROSS VIDEO LIMITED
CONTROL PANEL
RVS 210-ANALOG ACQUISITION
SCHEMATIC
A. TATTON
12 APR. 85
22210-20
ISSUE 2
SHEET 7 OF 8 SHEETS

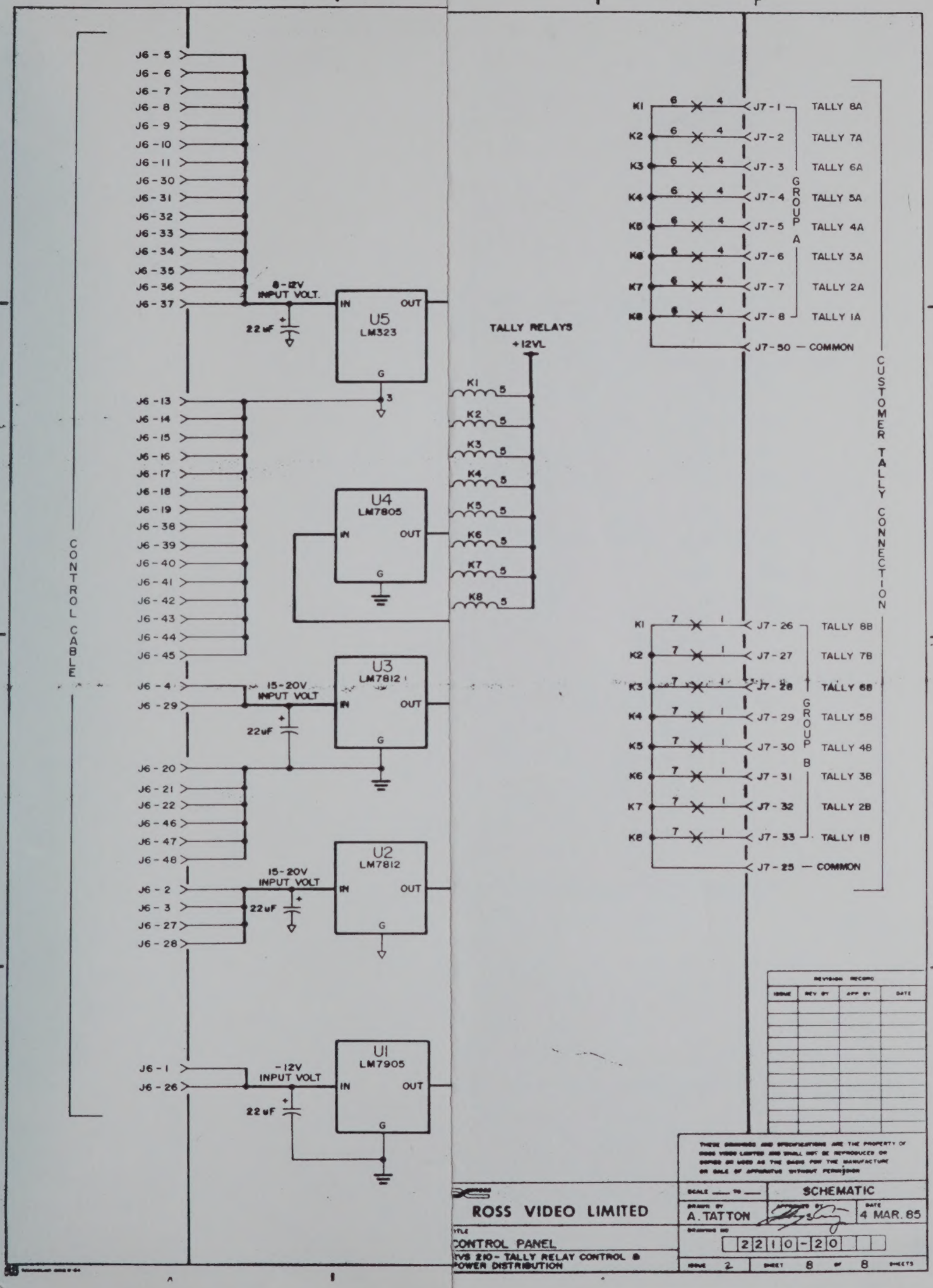
CONTROL CABLE
J6 - 5
J6 - 6
J6 - 7
J6 - 8
J6 - 9
J6 - 10
J6 - 11
J6 - 30
J6 - 31
J6 - 32
J6 - 33
J6 - 34
J6 - 35
J6 - 36
J6 - 37
8 - 12V INPUT VOLT.
22 uF
U5 LM323
IN
OUT
G
3
J6 - 13
J6 - 14
J6 - 15
J6 - 16
J6 - 17
J6 - 18
J6 - 19
J6 - 38
J6 - 39
J6 - 40
J6 - 41
J6 - 42
J6 - 43
J6 - 44
J6 - 45
U4 LM7805
J6 - 4
J6 - 29
15 - 20V INPUT VOLT
22uF
U3 LM7812
J6 - 20
J6 - 21
J6 - 22
J6 - 46
J6 - 47
J6 - 48
J6 - 2
J6 - 3
J6 - 27
J6 - 28
15 - 20V INPUT VOLT
22uF
U2 LM7812
J6 - 1
J6 - 26
- 12V INPUT VOLT
22 uF
U1 LM7905
TALLY RELAYS
+12VL
K1
K2
K3
K4
K5
K6
K7
K8
5
J7 - 1
J7 - 2
J7 - 3
J7 - 4
J7 - 5
J7 - 6
J7 - 7
J7 - 8
J7 - 50 — COMMON
TALLY 8A
TALLY 7A
TALLY 6A
TALLY 5A
TALLY 4A
TALLY 3A
TALLY 2A
TALLY 1A
GROUP A
6
4
J7 - 26
J7 - 27
J7 - 28
J7 - 29
J7 - 30
J7 - 31
J7 - 32
J7 - 33
J7 - 25 — COMMON
TALLY 8B
TALLY 7B
TALLY 6B
TALLY 5B
TALLY 4B
TALLY 3B
TALLY 2B
TALLY 1B
GROUP B
7
1
CUSTOMER TALLY CONNECTION
REVISION RECORD
ISSUE
REV BY
APP BY
DATE
THESE DRAWINGS AND SPECIFICATIONS ARE THE PROPERTY OF ROSS VIDEO LIMITED AND SHALL NOT BE REPRODUCED OR COPIED OR USED AS THE BASIS FOR THE MANUFACTURE OR SALE OF APPARATUS WITHOUT PERMISSION
ROSS VIDEO LIMITED
SCALE ___ TO ___
SCHEMATIC
DRAWN BY
A. TATTON
APPROVED BY
DATE
4 MAR. 85
DRAWING NO
2210-20
TITLE
CONTROL PANEL
RVS 210 - TALLY RELAY CONTROL & POWER DISTRIBUTION
ISSUE 2
SHEET 8 OF 8 SHEETS

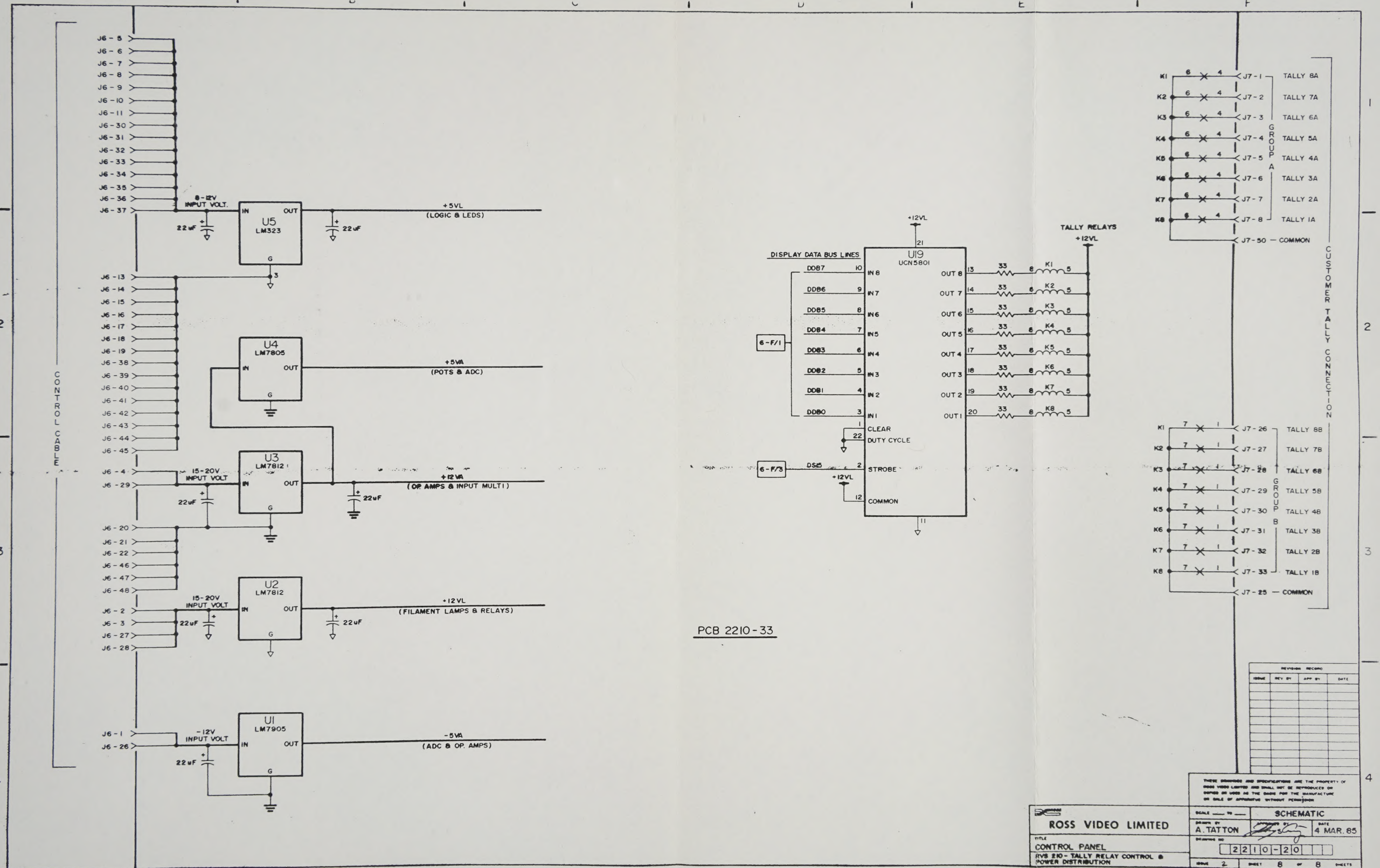
CONTROL CABLE
J6-5
J6-6
J6-7
J6-8
J6-9
J6-10
J6-11
J6-30
J6-31
J6-32
J6-33
J6-34
J6-35
J6-36
J6-37
8-12V INPUT VOLT.
22uF
U5 LM323
IN
OUT
G
+5VL (LOGIC & LEDS)
J6-13
J6-14
J6-15
J6-16
J6-17
J6-18
J6-19
J6-38
J6-39
J6-40
J6-41
J6-42
J6-43
J6-44
J6-45
U4 LM7805
+5VA (POTS & ADC)
J6-4
J6-29
15-20V INPUT VOLT
U3 LM7812
+12VA (OP. AMPS & INPUT MULTI)
J6-20
J6-21
J6-22
J6-46
J6-47
J6-48
J6-2
J6-3
J6-27
J6-28
U2 LM7812
+12VL (FILAMENT LAMPS & RELAYS)
J6-1
J6-26
-12V INPUT VOLT
U1 LM7905
-5VA (ADC & OP. AMPS)
+12VL
DISPLAY DATA BUS LINES
DDB7
DDB6
DDB5
DDB4
DDB3
DDB2
DDB1
DDB0
6-F/1
U19 UCN5801
IN 8
IN 7
IN 6
IN 5
IN 4
IN 3
IN 2
IN 1
CLEAR
DUTY CYCLE
6-F/3
DS15
STROBE
COMMON
OUT 8
OUT 7
OUT 6
OUT 5
OUT 4
OUT 3
OUT 2
OUT 1
33
K1
K2
K3
K4
K5
K6
K7
K8
TALLY RELAYS +12VL
J7-1
J7-2
J7-3
J7-4
J7-5
J7-6
J7-7
J7-8
J7-50 — COMMON
TALLY 8A
TALLY 7A
TALLY 6A
TALLY 5A
TALLY 4A
TALLY 3A
TALLY 2A
TALLY 1A
GROUP A
J7-26
J7-27
J7-28
J7-29
J7-30
J7-31
J7-32
J7-33
J7-25 — COMMON
TALLY 8B
TALLY 7B
TALLY 6B
TALLY 5B
TALLY 4B
TALLY 3B
TALLY 2B
TALLY 1B
GROUP B
CUSTOMER TALLY CONNECTION
PCB 2210-33
REVISION RECORD
ISSUE
REV BY
APP BY
DATE
THESE DRAWINGS AND SPECIFICATIONS ARE THE PROPERTY OF ROSS VIDEO LIMITED AND SHALL NOT BE REPRODUCED OR COPIED OR USED AS THE BASIS FOR THE MANUFACTURE OR SALE OF APPARATUS WITHOUT PERMISSION
ROSS VIDEO LIMITED
TITLE
CONTROL PANEL
RVS 210 - TALLY RELAY CONTROL & POWER DISTRIBUTION
SCALE ___ TO ___
SCHEMATIC
DRAWN BY A. TATTON
APPROVED BY
DATE 4 MAR. 85
DRAWING NO 2210-20
ISSUE 2
SHEET 8 OF 8 SHEETS

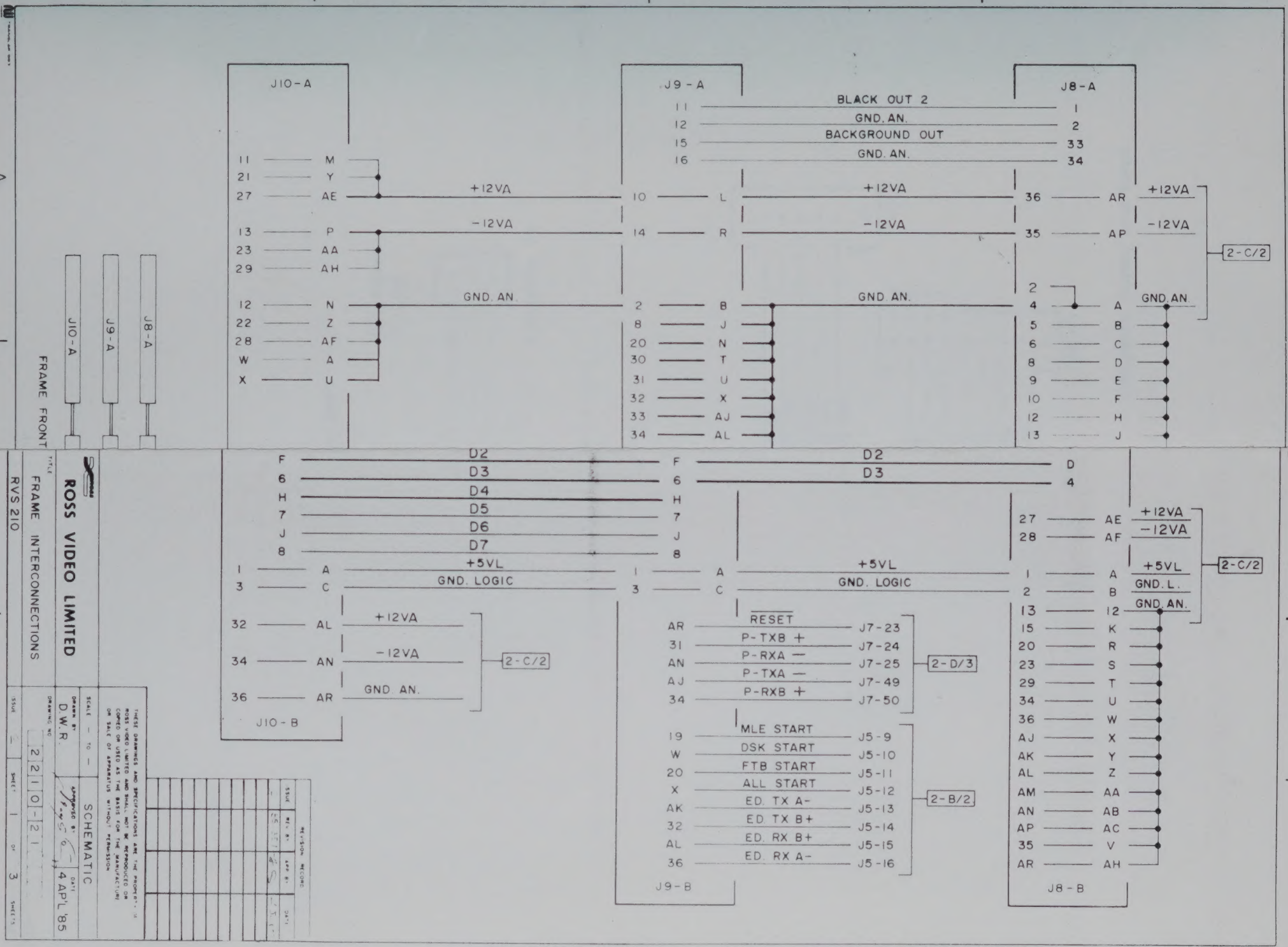
J10-A
J9-A
J8-A
FRAME FRONT
BLACK OUT 2
GND. AN.
BACKGROUND OUT
+12VA
-12VA
GND. AN.
2-C/2
D2
D3
D4
D5
D6
D7
+5VL
GND. LOGIC
GND. L.
RESET
P-TXB +
P-RXA —
P-TXA —
P-RXB +
2-D/3
MLE START
DSK START
FTB START
ALL START
ED. TX A-
ED. TX B+
ED. RX B+
ED. RX A-
2-B/2
J10-B
J9-B
J8-B
ROSS VIDEO LIMITED
TITLE
FRAME INTERCONNECTIONS
RVS 210
SCHEMATIC
DRAWN BY D.W.R.
DATE 4 APL '85
DRAWING NO 2 2 1 0 - 2 1
SHEET 1 OF 3 SHEETS
SCALE — TO —
ISSUE —
THESE DRAWINGS AND SPECIFICATIONS ARE THE PROPERTY OF ROSS VIDEO LIMITED AND SHALL NOT BE REPRODUCED OR COPIED OR USED AS THE BASIS FOR THE MANUFACTURE OR SALE OF APPARATUS WITHOUT PERMISSION
REVISION RECORD

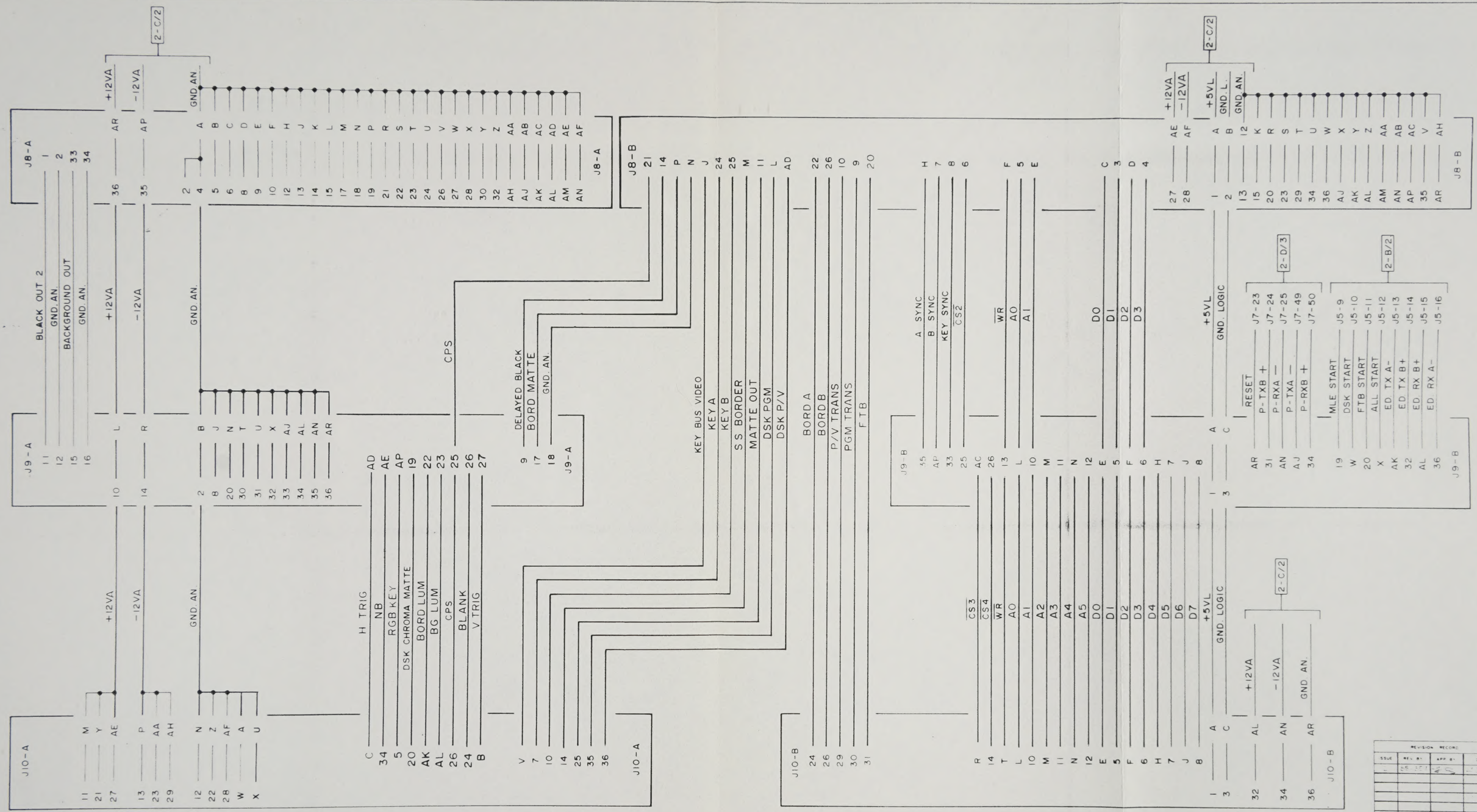

J8-A	J8-B	PCB 2210-40
J9-A	J9-B	PCB 2210-42
J10-A	J10-B	PCB 2210-41

FRAME FRONT VIEW

FRAME PLUG-IN PCB POSITIONS.

FRAME MOTHER PCB 2210-38

2-C/2

2 - SHEET NUMBER REFERENCE

C/2 - HORIZONTAL / VERTICAL GRID REFERENCE.

REVISION RECORD

ISSUE	REV. BY	APP. BY	DATE
—			

THESE DRAWINGS AND SPECIFICATIONS ARE THE PROPERTY OF ROSS VIDEO LIMITED AND SHALL NOT BE REPRODUCED OR COPIED OR USED AS THE BASIS FOR THE MANUFACTURE OR SALE OF APPARATUS WITHOUT PERMISSION

ROSS VIDEO LIMITED

TITLE: FRAME INTERCONNECTIONS

RVS 210

SCALE — TO —

SCHEMATIC

DRAWN BY: D.W.R.

APPROVED BY:

DATE: 4 AP'L '85

DRAWING NO: 2210-21

ISSUE —

SHEET 1 OF 3 SHEETS

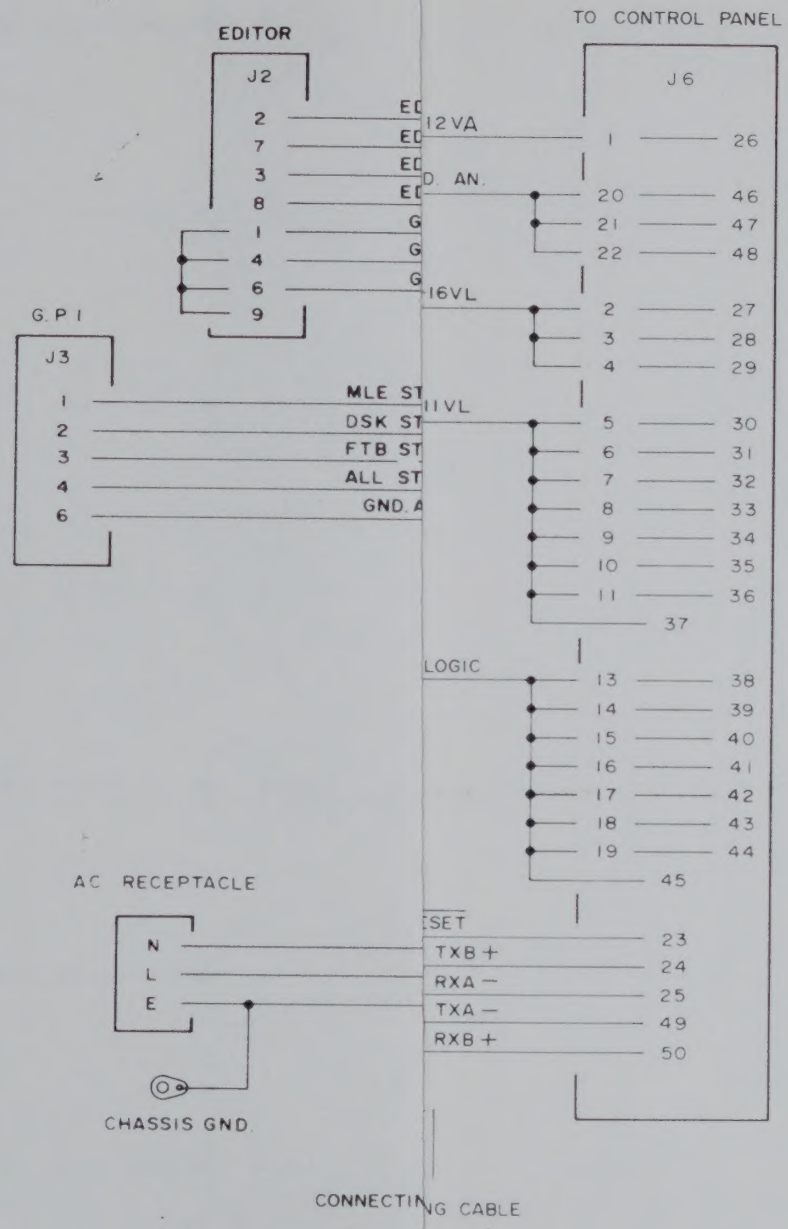

REVISION RECORD			
ISSUE	REV BY	APP BY	DATE

THESE DRAWINGS AND SPECIFICATIONS ARE THE PROPERTY OF ROSS VIDEO LIMITED AND SHALL NOT BE REPRODUCED OR COPIED OR USED AS THE BASIS FOR THE MANUFACTURE OR SALE OF APPARATUS WITHOUT PERMISSION

ROSS VIDEO LIMITED

SCALE — TO — | SCHEMATIC

DRAWN BY D.W.R | APPROVED BY | DATE 11 APL '85

TITLE FRAME INTERCONNECTIONS

DRAWING NO 2210-21

RVS 210 | ISSUE 2 | SHEET 2 OF 3 SHEETS

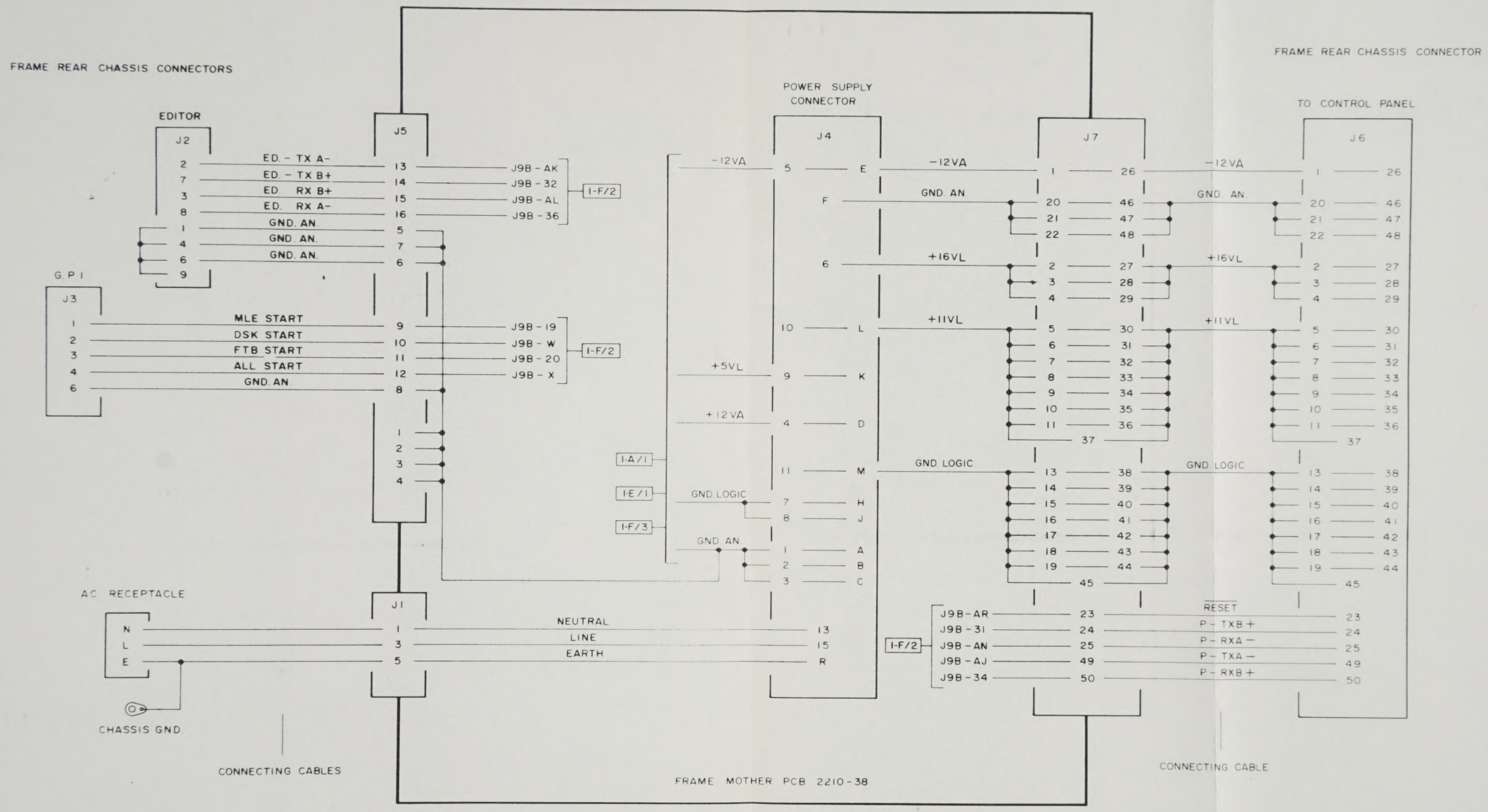

REVISION RECORD			
ISSUE	REV. BY	APP. BY	DATE

THESE DRAWINGS AND SPECIFICATIONS ARE THE PROPERTY OF ROSS VIDEO LIMITED AND SHALL NOT BE REPRODUCED OR COPIED OR USED AS THE BASIS FOR THE MANUFACTURE OR SALE OF APPARATUS WITHOUT PERMISSION.

ROSS VIDEO LIMITED

FRAME INTERCONNECTIONS

RVS 210

SCALE — TO —

SCHEMATIC

DRAWN BY: D.W.R

APPROVED BY:

DATE: 11 APR'L '85

DRAWING NO: 2210-21

ISSUE 2

SHEET 2 OF 3 SHEETS

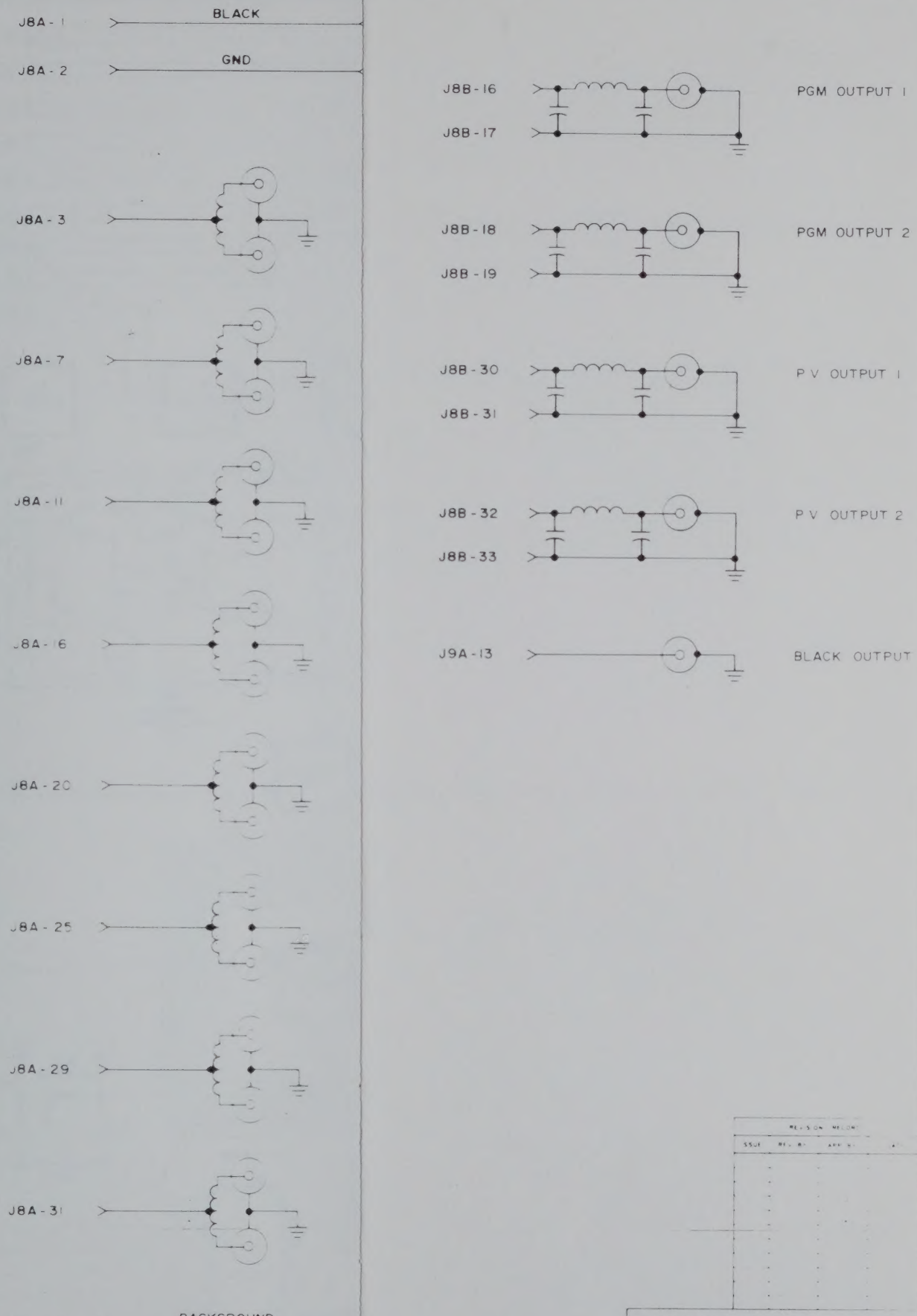

REVISION RECORD			
ISSUE	REV. BY	APP. BY	DATE

THESE DRAWINGS AND SPECIFICATIONS ARE THE PROPERTY OF ROSS VIDEO LIMITED AND SHALL NOT BE REPRODUCED OR COPIED OR USED AS THE BASIS FOR THE MANUFACTURE OR SALE OF APPARATUS WITHOUT PERMISSION

ROSS

ROSS VIDEO LIMITED

TITLE: FRAME INTERCONNECTIONS

RVS 210

SCALE — TO — | SCHEMATIC

DRAWN BY: A. LAWTHER | APPROVED BY: | DATE: 4 APR '85

DRAWING NO: 2210-211

ISSUE 2 | SHEET 3 OF 3 SHEETS

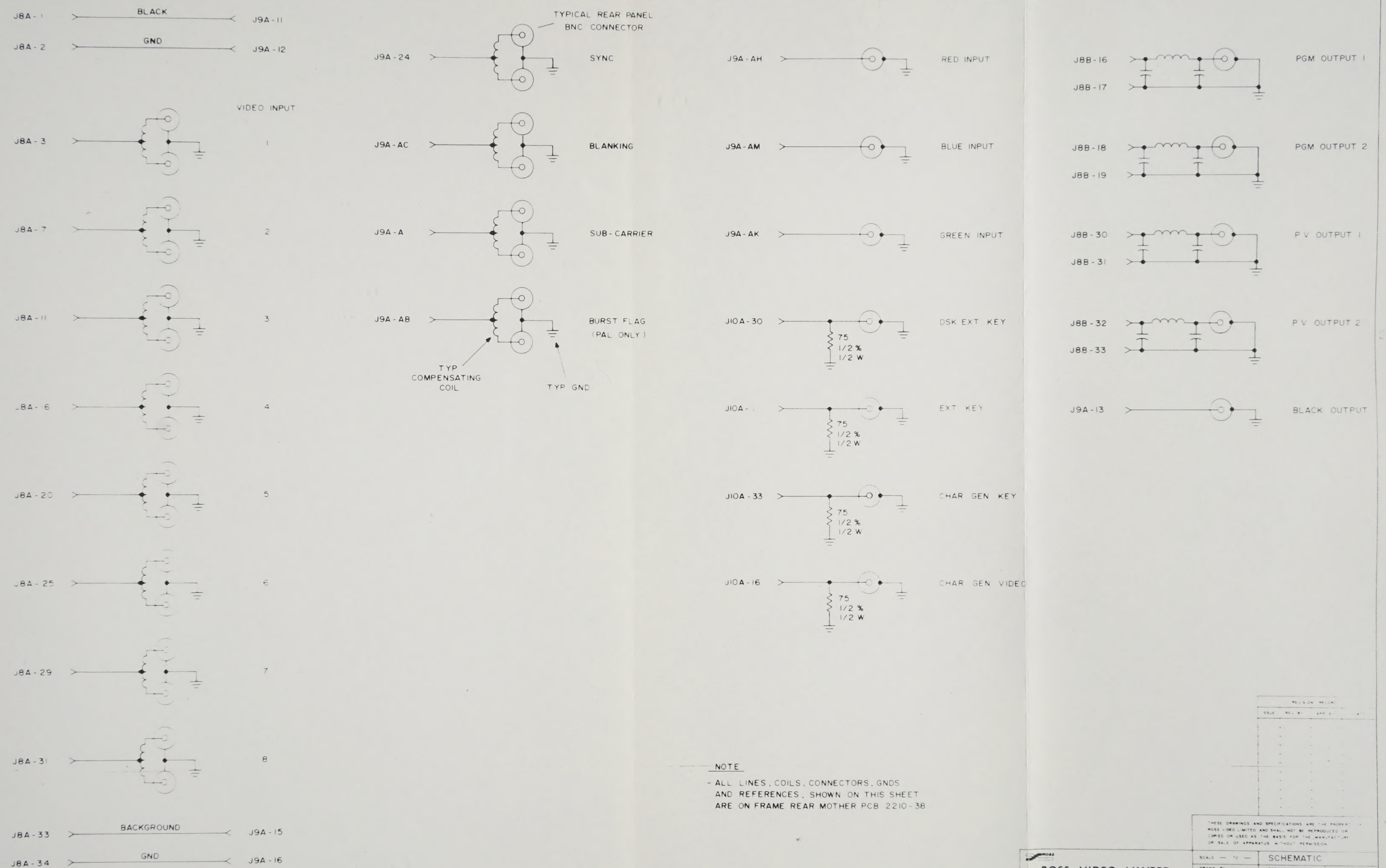

NOTE

- ALL LINES, COILS, CONNECTORS, GNDS AND REFERENCES, SHOWN ON THIS SHEET ARE ON FRAME REAR MOTHER PCB 2210-38

REVISION HISTORY

ISSUE	REV BY	APP BY	

THESE DRAWINGS AND SPECIFICATIONS ARE THE PROPERTY OF ROSS VIDEO LIMITED AND SHALL NOT BE REPRODUCED OR COPIED OR USED AS THE BASIS FOR THE MANUFACTURE OR SALE OF APPARATUS WITHOUT PERMISSION

ROSS VIDEO LIMITED	SCALE — TO —	SCHEMATIC	
	DRAWN BY A LAWTHER	APPROVED BY	DATE 4 APR '85
TITLE FRAME INTERCONNECTIONS	DRAWING NO 2210-21		
RVS 210	ISSUE 2	SHEET 3 OF 3	SHEETS

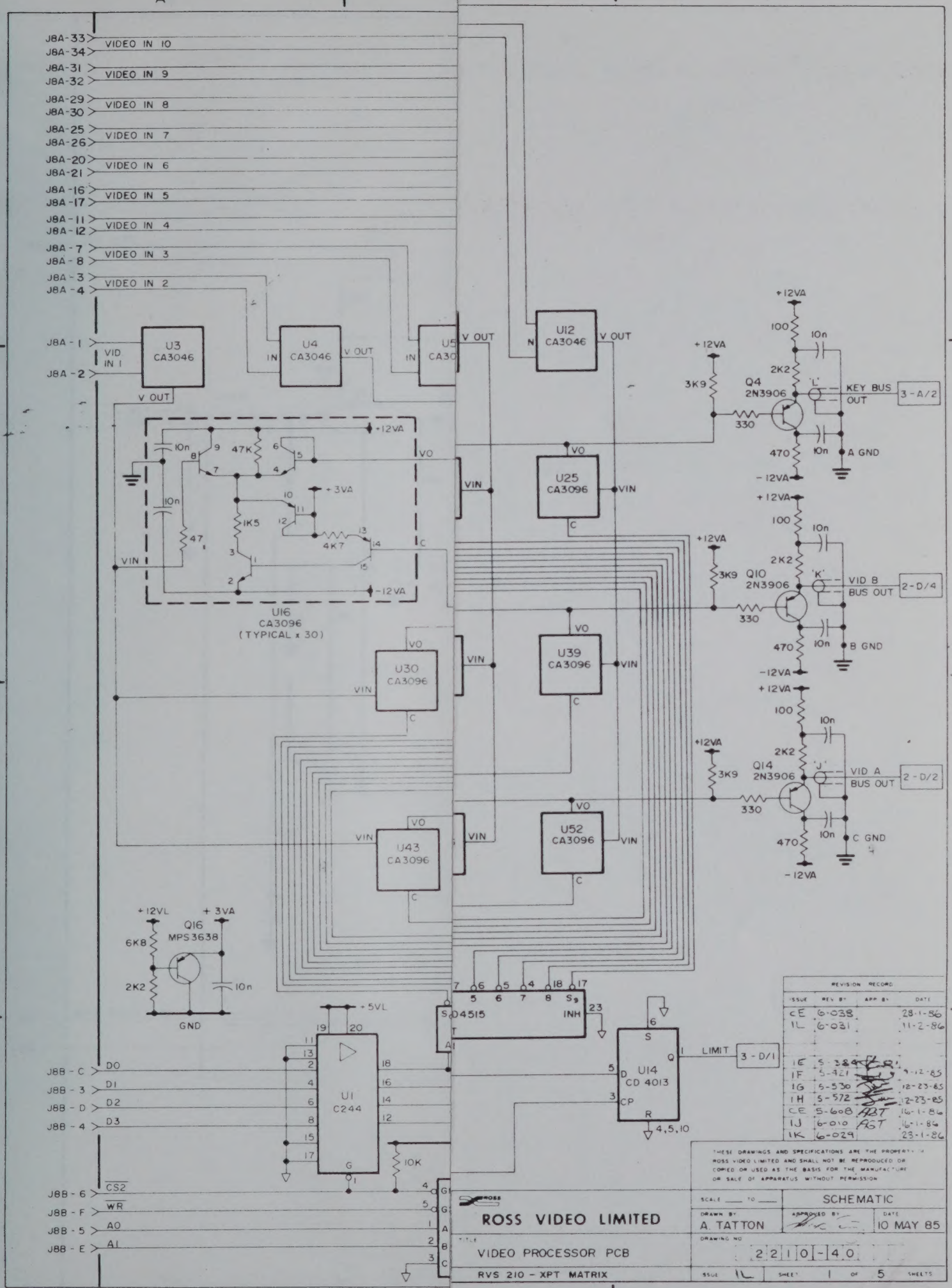
J8A-33
J8A-34
VIDEO IN 10
J8A-31
J8A-32
VIDEO IN 9
J8A-29
J8A-30
VIDEO IN 8
J8A-25
J8A-26
VIDEO IN 7
J8A-20
J8A-21
VIDEO IN 6
J8A-16
J8A-17
VIDEO IN 5
J8A-11
J8A-12
VIDEO IN 4
J8A-7
J8A-8
VIDEO IN 3
J8A-3
J8A-4
VIDEO IN 2
J8A-1
J8A-2
VID IN 1
U3 CA3046
U4 CA3046
U5 CA3046
U12 CA3046
V OUT
IN
U16 CA3096 (TYPICAL x 30)
U25 CA3096
U30 CA3096
U39 CA3096
U43 CA3096
U52 CA3096
VIN
VO
C
+12VA
-12VA
+3VA
10n
47K
1K5
4K7
47
Q4 2N3906
Q10 2N3906
Q14 2N3906
3K9
330
470
100
2K2
KEY BUS OUT
VID B BUS OUT
VID A BUS OUT
3-A/2
2-D/4
2-D/2
A GND
B GND
C GND
Q16 MPS3638
+12VL
+3VA
6K8
2K2
GND
+5VL
U1 C244
10K
J8B-C
J8B-3
J8B-D
J8B-4
D0
D1
D2
D3
J8B-6
J8B-F
J8B-5
J8B-E
CS2
WR
A0
A1
S D4515 INH
U14 CD 4013
LIMIT
3-D/1
4,5,10
REVISION RECORD
ISSUE REV BY APP BY DATE
CE 6-038 28-1-86
IL 6-031 11-2-86
IE S-384 9-12-85
IF S-421 9-12-85
IG S-530 12-23-85
IH S-572 12-23-85
CE S-608 16-1-86
IJ 6-010 16-1-86
IK 6-029 23-1-86
THESE DRAWINGS AND SPECIFICATIONS ARE THE PROPERTY OF ROSS VIDEO LIMITED AND SHALL NOT BE REPRODUCED OR COPIED OR USED AS THE BASIS FOR THE MANUFACTURE OR SALE OF APPARATUS WITHOUT PERMISSION
ROSS VIDEO LIMITED
SCHEMATIC
DRAWN BY A. TATTON
DATE 10 MAY 85
VIDEO PROCESSOR PCB
RVS 210 - XPT MATRIX
DRAWING NO 2210-40
ISSUE IL
SHEET 1 OF 5 SHEETS

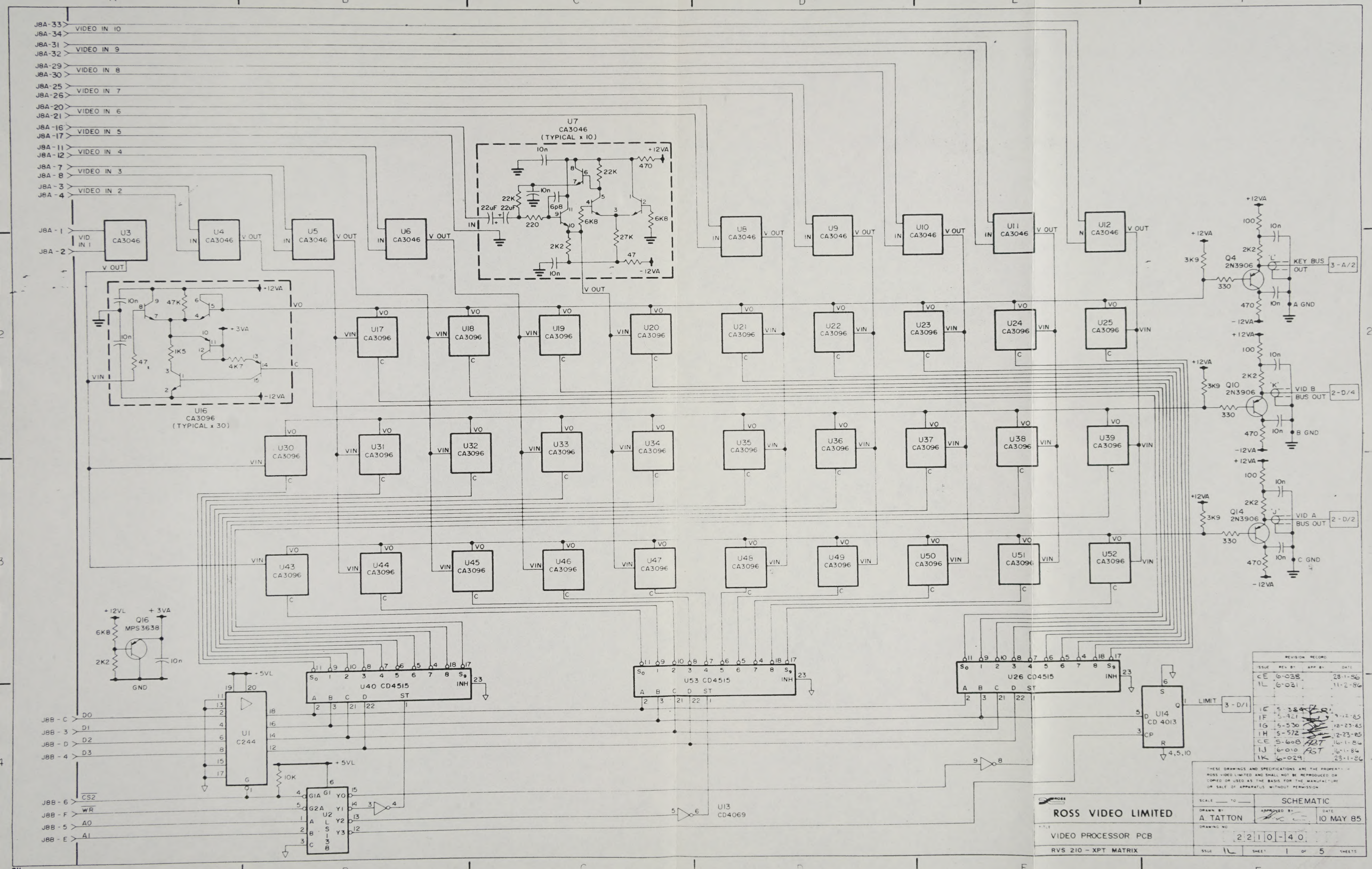
VIDEO IN 10
VIDEO IN 9
VIDEO IN 8
VIDEO IN 7
VIDEO IN 6
VIDEO IN 5
VIDEO IN 4
VIDEO IN 3
VIDEO IN 2
U7 CA3046 (TYPICAL x 10)
U16 CA3096 (TYPICAL x 30)
U40 CD4515
U53 CD4515
U26 CD4515
U1 C244
U2 LS138
U13 CD4069
U14 CD 4013
Q16 MPS3638
Q4 2N3906
Q10 2N3906
Q14 2N3906
KEY BUS OUT
VID B BUS OUT
VID A BUS OUT
A GND
B GND
C GND
LIMIT
REVISION RECORD
THESE DRAWINGS AND SPECIFICATIONS ARE THE PROPERTY OF ROSS VIDEO LIMITED AND SHALL NOT BE REPRODUCED OR COPIED OR USED AS THE BASIS FOR THE MANUFACTURE OR SALE OF APPARATUS WITHOUT PERMISSION
ROSS VIDEO LIMITED
SCHEMATIC
A. TATTON
10 MAY 85
VIDEO PROCESSOR PCB
RVS 210 - XPT MATRIX
2210-40
SHEET 1 OF 5

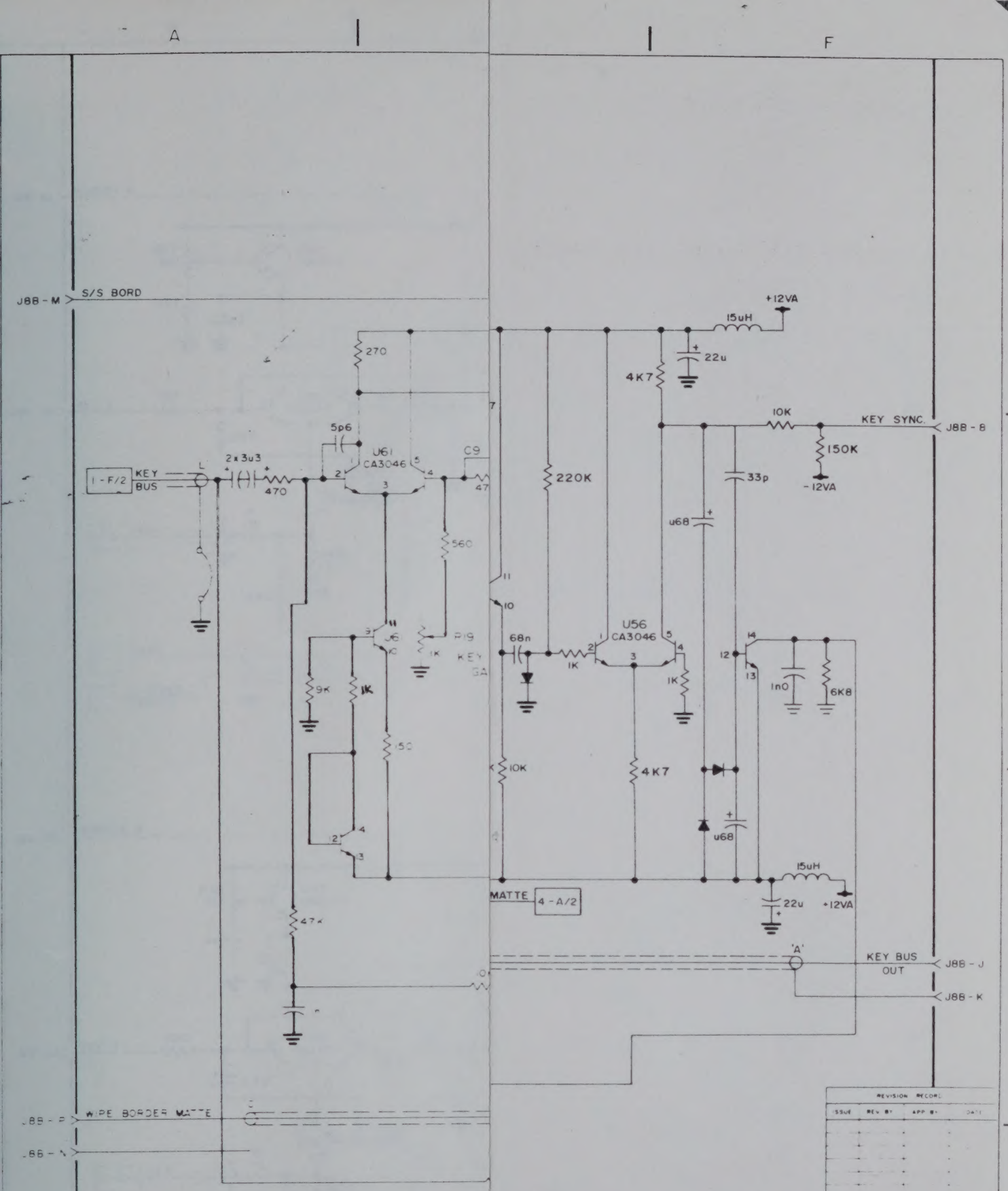
A
F
J8B - M
S/S BORD
+12VA
15uH
22u
4K7
270
10K
KEY SYNC.
J8B - B
150K
-12VA
5p6
U61
CA3046
C9
2x3u3
470
1 - F/2
KEY
BUS
47
220K
33p
u68
560
U56
CA3046
68n
1K
P19
KEY
GA
9K
1K
150
10K
4K7
1n0
6K8
u68
15uH
22u
+12VA
MATTE
4 - A/2
47K
'A'
KEY BUS
OUT
J8B - J
J8B - K
WIPE BORDER MATTE
J8B - P
J8B - N
REVISION RECORD
ISSUE
REV BY
APP BY
DATE
THESE DRAWINGS AND SPECIFICATIONS ARE THE PROPERTY OF ROSS VIDEO LIMITED AND SHALL NOT BE REPRODUCED OR COPIED OR USED AS THE BASIS FOR THE MANUFACTURE OR SALE OF APPARATUS WITHOUT PERMISSION
ROSS
ROSS VIDEO LIMITED
SCALE ___ TO ___
SCHEMATIC
DRAWN BY
A. TATTON
APPROVED BY
DATE
13 MAY 85
VIDEO PROCESSOR PCB
DRAWING NO
2210-40
RVS 210 - VIDEO DELAY AMP
ISSUE
SHEET 3 OF 5 SHEETS

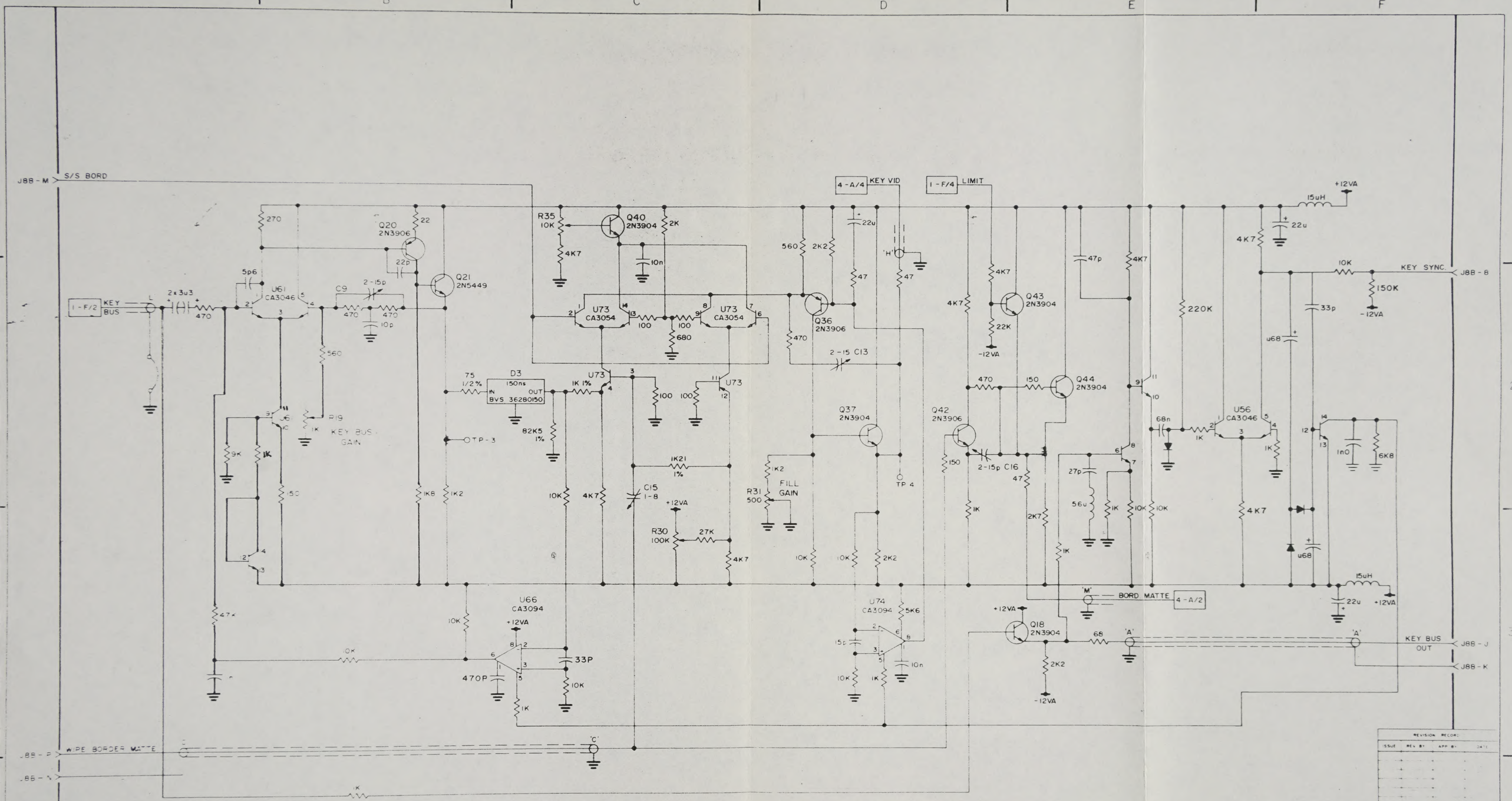

REVISION RECORD

ISSUE	REV BY	APP BY	DATE

THESE DRAWINGS AND SPECIFICATIONS ARE THE PROPERTY OF ROSS VIDEO LIMITED AND SHALL NOT BE REPRODUCED OR COPIED OR USED AS THE BASIS FOR THE MANUFACTURE OR SALE OF APPARATUS WITHOUT PERMISSION

ROSS VIDEO LIMITED

TITLE: VIDEO PROCESSOR PCB

RVS 210 - VIDEO DELAY AMP

SCALE ___ TO ___

DRAWN BY: A TATTON

APPROVED BY:

SCHEMATIC

DATE: 13 MAY 85

DRAWING NO. 2210-40

ISSUE 1

SHEET 3 OF 5 SHEETS

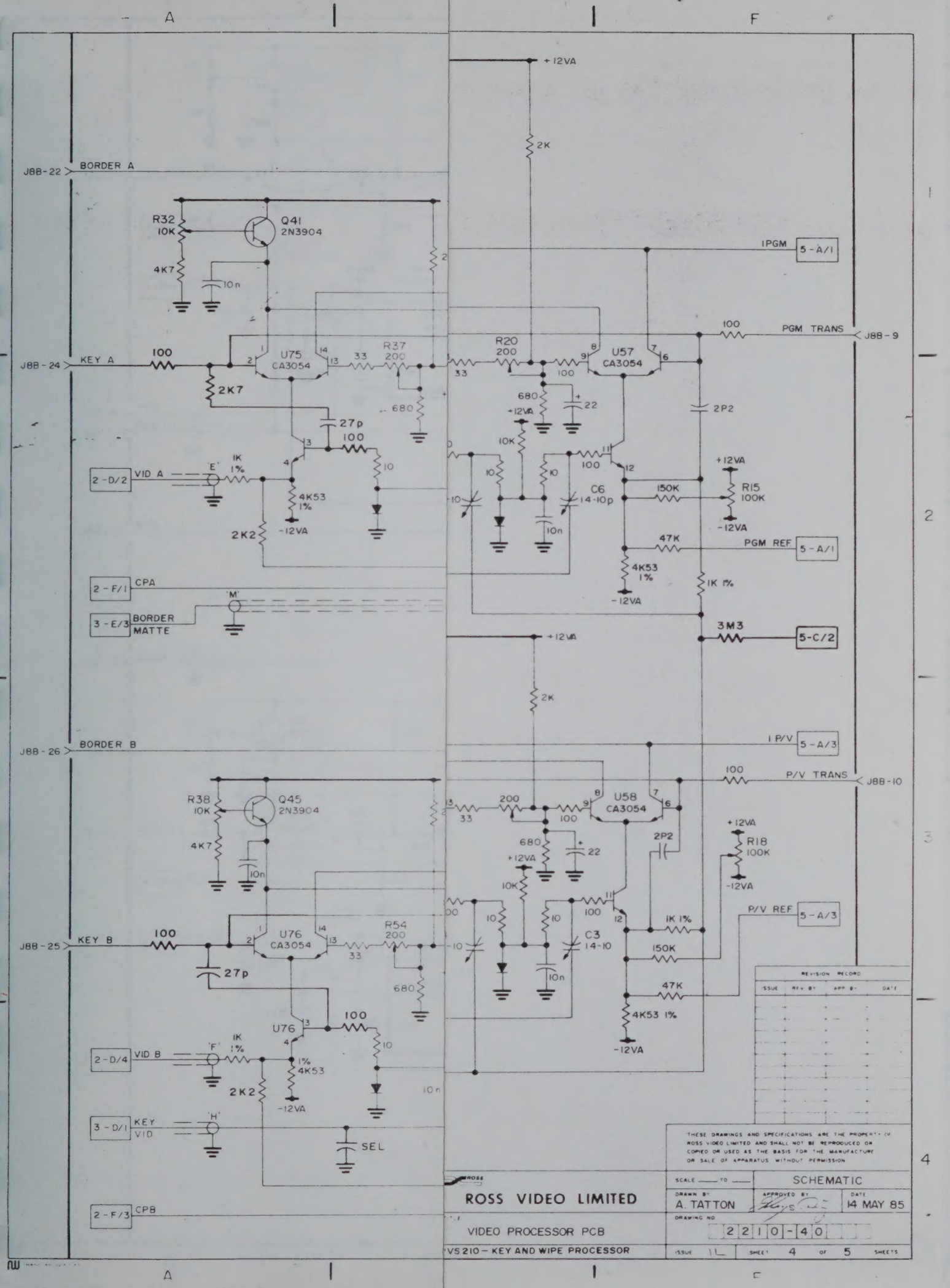
J8B-22 BORDER A
J8B-24 KEY A
J8B-26 BORDER B
J8B-25 KEY B
J8B-9 PGM TRANS
J8B-10 P/V TRANS
1PGM 5-A/1
PGM REF 5-A/1
1 P/V 5-A/3
P/V REF 5-A/3
5-C/2
2-D/2 VID A
2-F/1 CPA
3-E/3 BORDER MATTE
2-D/4 VID B
3-D/1 KEY VID
2-F/3 CPB
SEL
R32 10K
4K7
Q41 2N3904
U75 CA3054
U76 CA3054
U57 CA3054
U58 CA3054
R37 200
R54 200
R20 200
R38 10K
Q45 2N3904
C6 14-10p
C3 14-10
R15 100K
R18 100K
2K7
27p
2K2
4K53 1%
2P2
3M3
150K
47K
1K 1%
+12VA
-12VA
2K
680
22
10n
100
10
33
REVISION RECORD
ISSUE REV BY APP BY DATE
THESE DRAWINGS AND SPECIFICATIONS ARE THE PROPERTY OF ROSS VIDEO LIMITED AND SHALL NOT BE REPRODUCED OR COPIED OR USED AS THE BASIS FOR THE MANUFACTURE OR SALE OF APPARATUS WITHOUT PERMISSION
ROSS VIDEO LIMITED
VIDEO PROCESSOR PCB
VS 210 – KEY AND WIPE PROCESSOR
SCALE ___ TO ___
SCHEMATIC
DRAWN BY A. TATTON
APPROVED BY
DATE 14 MAY 85
DRAWING NO 2210-40
ISSUE 1L
SHEET 4 OF 5 SHEETS

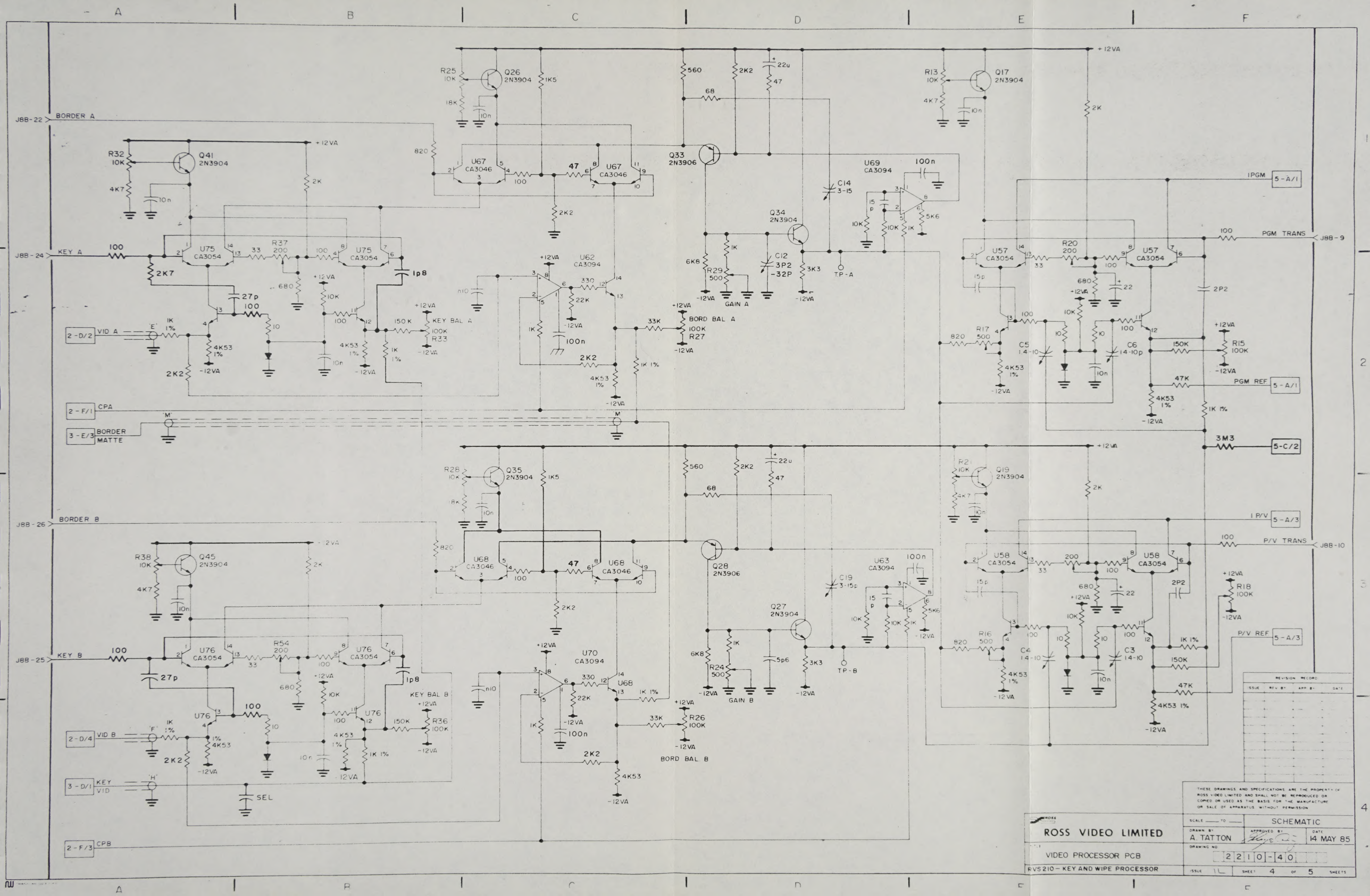
J8B-22 BORDER A
J8B-24 KEY A
J8B-26 BORDER B
J8B-25 KEY B
2-D/2 VID A
2-F/1 CPA
3-E/3 BORDER MATTE
2-D/4 VID B
3-D/1 KEY VID
2-F/3 CPB
SEL
KEY BAL A
KEY BAL B
GAIN A
GAIN B
BORD BAL A
BORD BAL B
TP-A
TP-B
1PGM 5-A/1
PGM TRANS J8B-9
PGM REF 5-A/1
5-C/2
1 P/V 5-A/3
P/V TRANS J8B-10
P/V REF 5-A/3
+12VA
-12VA
Q26 2N3904
Q41 2N3904
Q33 2N3906
Q34 2N3904
Q17 2N3904
Q35 2N3904
Q45 2N3904
Q28 2N3906
Q27 2N3904
Q19 2N3904
U67 CA3046
U75 CA3054
U62 CA3094
U69 CA3094
U57 CA3054
U68 CA3046
U76 CA3054
U70 CA3094
U63 CA3094
U58 CA3054
C14 3-15
C12 3P2 -32P
C5 1.4-10
C6 14-10p
C19 3-15p
C4 14-10
C3 14-10
R29 500
R24 500
R17 500
R16 500
R27 100K
R26 100K
R33 100K
R36 100K
R15 100K
R18 100K
REVISION RECORD
ISSUE REV BY APP BY DATE
THESE DRAWINGS AND SPECIFICATIONS ARE THE PROPERTY OF ROSS VIDEO LIMITED AND SHALL NOT BE REPRODUCED OR COPIED OR USED AS THE BASIS FOR THE MANUFACTURE OR SALE OF APPARATUS WITHOUT PERMISSION
ROSS VIDEO LIMITED
VIDEO PROCESSOR PCB
RVS210 - KEY AND WIPE PROCESSOR
SCALE ___ TO ___
SCHEMATIC
DRAWN BY A. TATTON
APPROVED BY
DATE 14 MAY 85
DRAWING NO 2210-40
ISSUE 1L
SHEET 4 OF 5 SHEETS

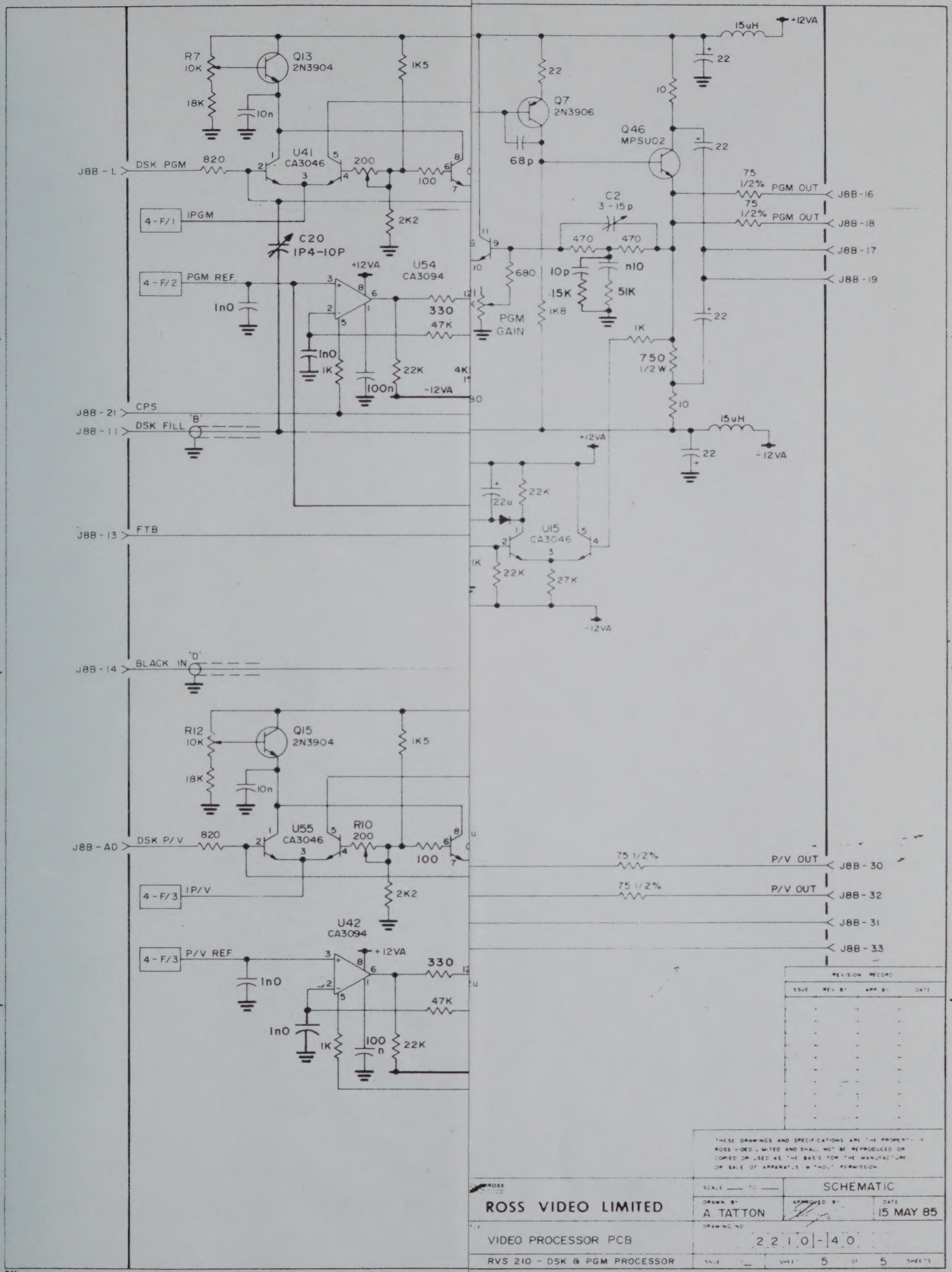
R7
10K
18K
Q13
2N3904
10n
1K5
U41
CA3046
J8B - L
DSK PGM
820
200
100
4 - F/1
1PGM
2K2
C20
1P4-10P
4 - F/2
PGM REF.
+12VA
U54
CA3094
1n0
330
47K
1K
22K
100n
-12VA
J8B - 21
CPS
J8B - 11
DSK FILL
'B'
J8B - 13
FTB
J8B - 14
BLACK IN
'D'
R12
10K
18K
Q15
2N3904
10n
1K5
U55
CA3046
R10
200
J8B - AD
DSK P/V
820
100
4 - F/3
1P/V
2K2
U42
CA3094
4 - F/3
P/V REF
+12VA
330
47K
1n0
1K
100 n
22K
22
Q7
2N3906
68p
680
PGM GAIN
1K8
10
Q46
MPSU02
15uH
+12VA
22
75
1/2%
PGM OUT
J8B - 16
J8B - 18
J8B - 17
J8B - 19
C2
3 - 15p
470
470
10p
n10
15K
51K
1K
750
1/2 W
10
15uH
-12VA
22u
22K
U15
CA3046
27K
-12VA
75 1/2%
P/V OUT
J8B - 30
J8B - 32
J8B - 31
J8B - 33
REVISION RECORD
ISSUE
REV BY
APP BY
DATE
THESE DRAWINGS AND SPECIFICATIONS ARE THE PROPERTY OF ROSS VIDEO LIMITED AND SHALL NOT BE REPRODUCED OR COPIED OR USED AS THE BASIS FOR THE MANUFACTURE OR SALE OF APPARATUS WITHOUT PERMISSION
ROSS
ROSS VIDEO LIMITED
SCALE — TO —
SCHEMATIC
DRAWN BY
A TATTON
APPROVED BY
DATE
15 MAY 85
VIDEO PROCESSOR PCB
DRAWING NO
2210-40
RVS 210 - DSK & PGM PROCESSOR
SHEET 5 OF 5 SHEETS

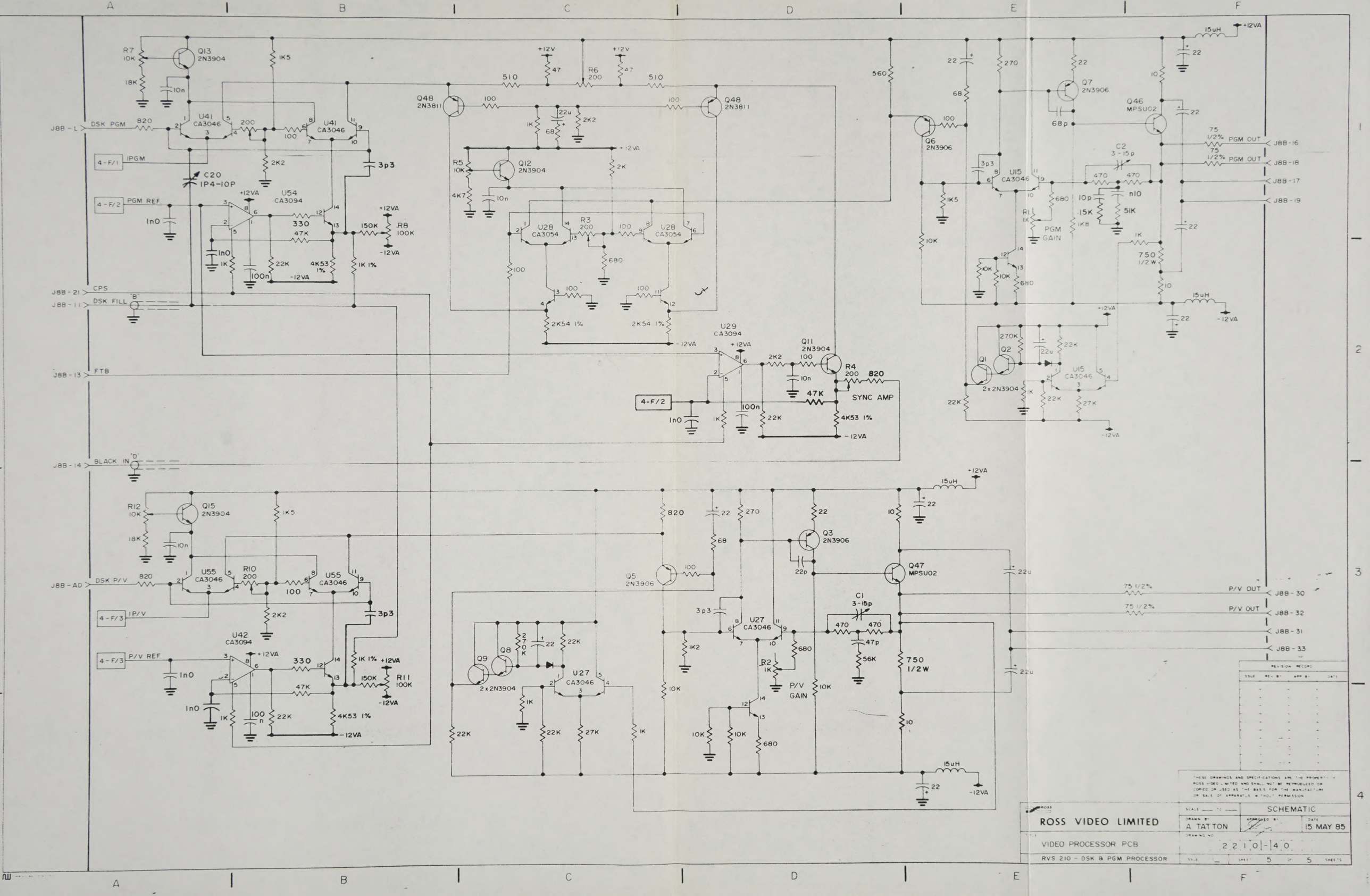
J8B - L
DSK PGM
4 - F/1
IPGM
4 - F/2
PGM REF
J8B - 21
CPS
J8B - 11
DSK FILL
J8B - 13
FTB
J8B - 14
BLACK IN
J8B - AD
DSK P/V
4 - F/3
IP/V
P/V REF
U41 CA3046
U54 CA3094
U42 CA3094
U55 CA3046
Q13 2N3904
Q15 2N3904
C20 IP4-10P
R7 10K
R12 10K
R8 100K
R11 100K
Q48 2N3811
Q12 2N3904
R5 10K
R6 200
U28 CA3054
R3 200
U29 CA3094
Q11 2N3904
R4 200
SYNC AMP
Q6 2N3906
Q7 2N3906
Q46 MPSU02
U15 CA3046
C2 3-15p
R1 1K
PGM GAIN
Q1
Q2
2x2N3904
J8B-16
PGM OUT
J8B-18
PGM OUT
J8B-17
J8B-19
Q5 2N3906
Q3 2N3906
Q47 MPSU02
U27 CA3046
C1 3-15p
R2 1K
P/V GAIN
Q9
Q8
J8B-30
P/V OUT
J8B-32
P/V OUT
J8B-31
J8B-33
+12VA
-12VA
15uH
REVISION RECORD
THESE DRAWINGS AND SPECIFICATIONS ARE THE PROPERTY OF ROSS VIDEO LIMITED AND SHALL NOT BE REPRODUCED OR COPIED OR USED AS THE BASIS FOR THE MANUFACTURE OR SALE OF APPARATUS WITHOUT PERMISSION
ROSS VIDEO LIMITED
SCHEMATIC
A TATTON
15 MAY 85
VIDEO PROCESSOR PCB
2210-40
RVS 210 - DSK & PGM PROCESSOR
SHEET 5 OF 5 SHEETS

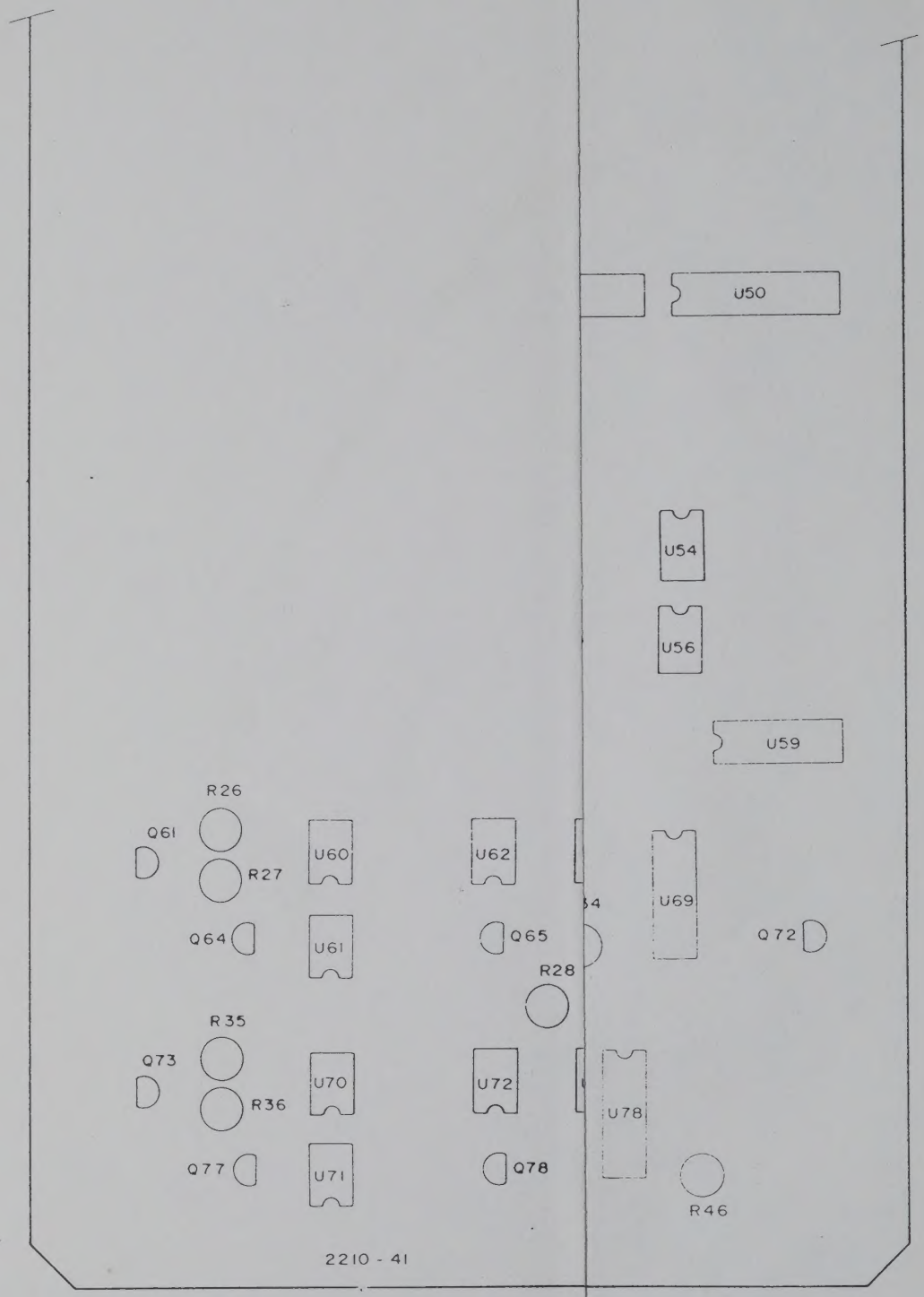

THIS SHEET

U47 - U78

R16 - R46

Q57 - Q85

REVISION RECORD

ISSUE	REV. BY	APP. BY	DATE

THESE DRAWINGS AND SPECIFICATIONS ARE THE PROPERTY OF ROSS VIDEO LIMITED AND SHALL NOT BE REPRODUCED OR COPIED OR USED AS THE BASIS FOR THE MANUFACTURE OR SALE OF APPARATUS WITHOUT PERMISSION

ROSS VIDEO LIMITED

SCALE — TO —

PCB LAYOUT

DRAWN BY A. LAWTHER

APPROVED BY

DATE 6 MAY '8

TITLE EFFECTS CONTROL PCB

DRAWING NO 2210-41

RVS 210

ISSUE 3

SHEET 2 OF 2 SHEETS

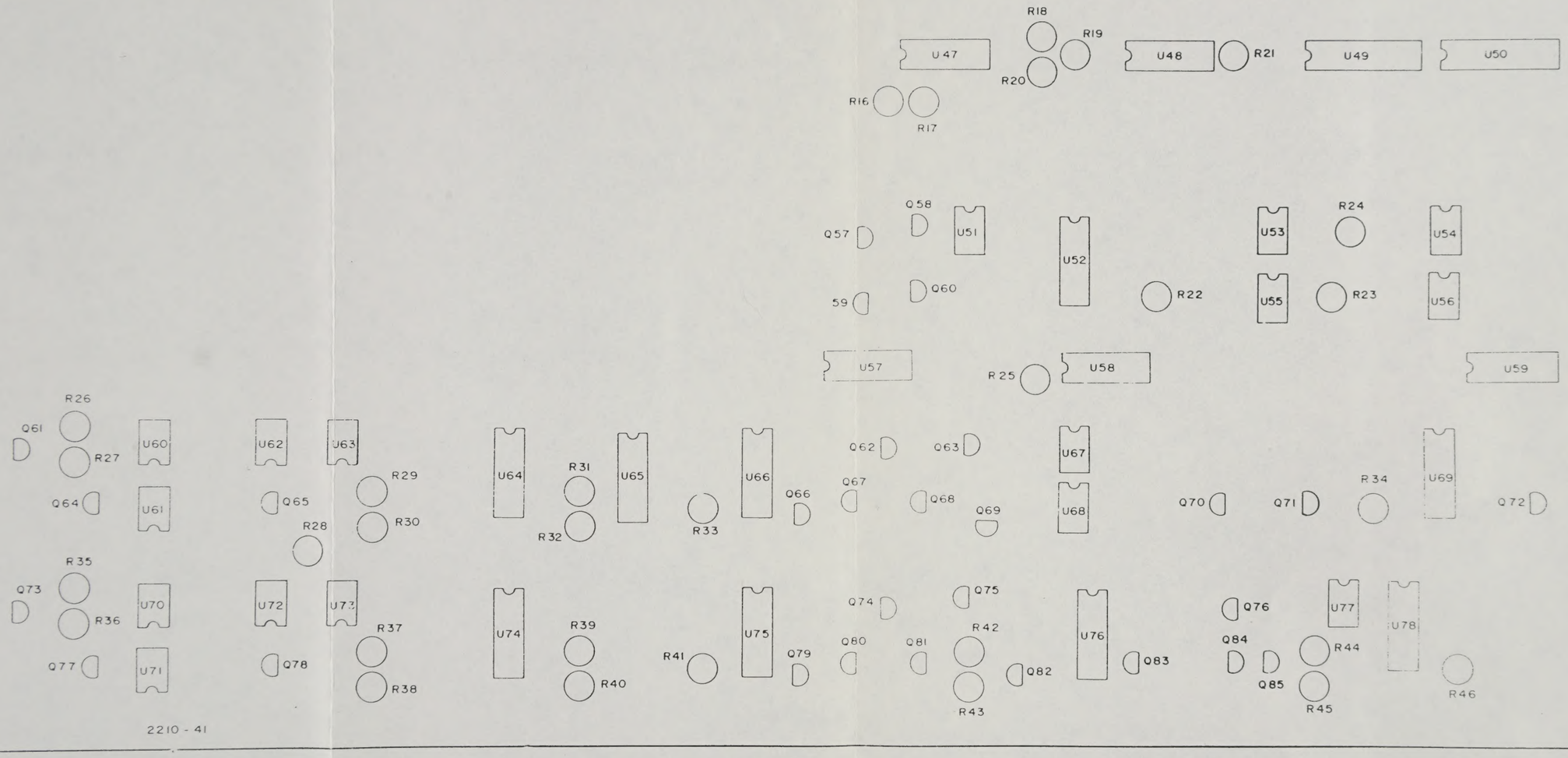

THIS SHEET

U47 - U78

R16 - R46

Q57 - Q85

REVISION RECORD

ISSUE	REV. BY	APP. BY	DATE

THESE DRAWINGS AND SPECIFICATIONS ARE THE PROPERTY OF ROSS VIDEO LIMITED AND SHALL NOT BE REPRODUCED OR COPIED OR USED AS THE BASIS FOR THE MANUFACTURE OR SALE OF APPARATUS WITHOUT PERMISSION

ROSS VIDEO LIMITED

SCALE — TO —

PCB LAYOUT

DRAWN BY: A. LAWTHER

APPROVED BY:

DATE: 6 MAY '8

TITLE: EFFECTS CONTROL PCB

DRAWING NO: 2210-41

RVS 210

ISSUE 3

SHEET 2 OF 2

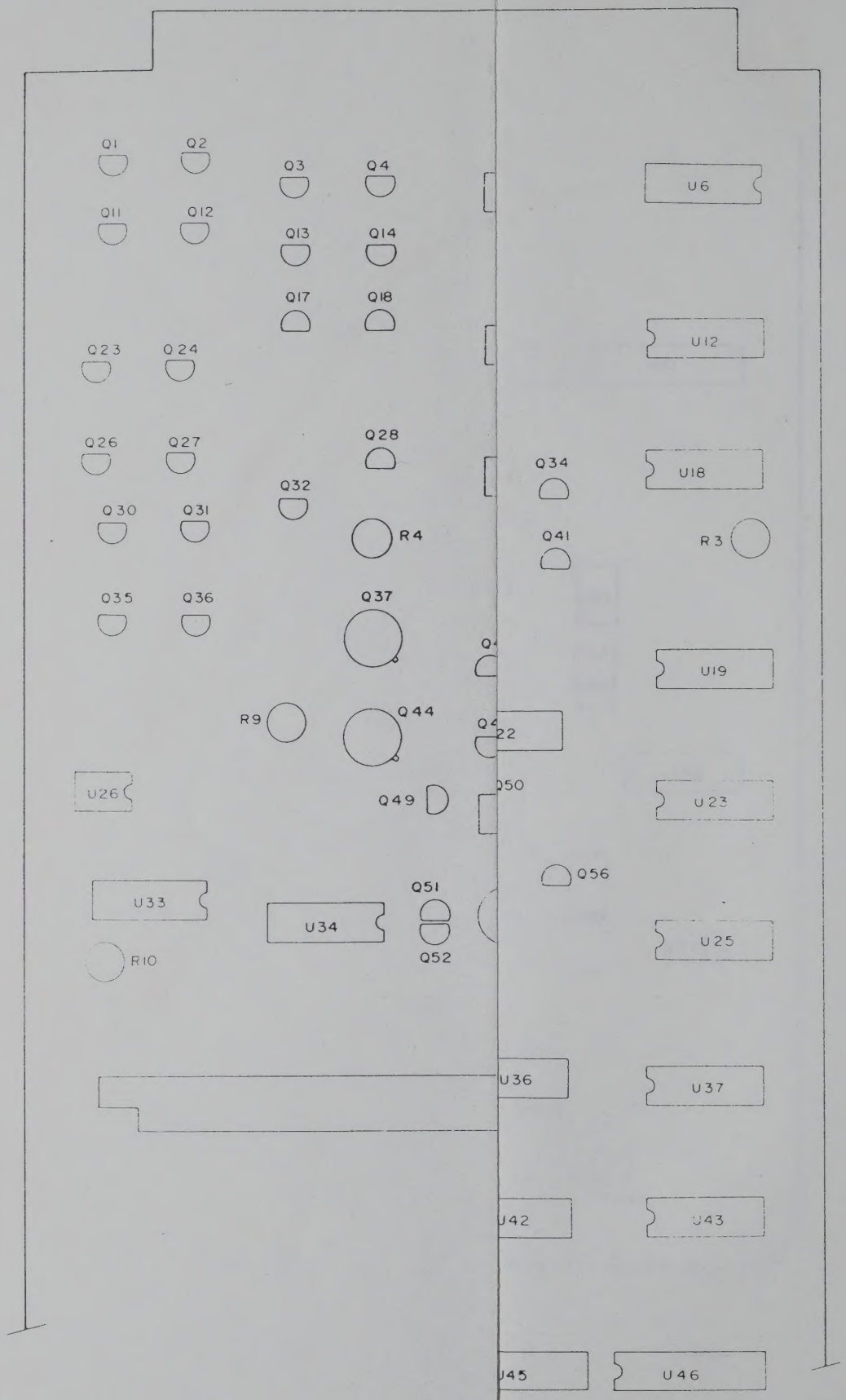

THIS SHEET

U1 - U46

R1 - R15

Q1 - Q56

C1, C2

Q86 & Q87

REVISION RECORD			
ISSUE	REV BY	APP BY	DATE
2E	S. 434	[illegible]	1/17/8[illegible]
2F	S. 443	[illegible]	10/1[illegible]
2G	S. 4[illegible]	[illegible]	1/[illegible]
3	S. 4[illegible]	[illegible]	10/16/[illegible]

THESE DRAWINGS AND SPECIFICATIONS ARE THE PROPERTY OF ROSS VIDEO LIMITED AND SHALL NOT BE REPRODUCED OR COPIED OR USED AS THE BASIS FOR THE MANUFACTURE OR SALE OF APPARATUS WITHOUT PERMISSION

ROSS VIDEO LIMITED

SCALE — TO — PCB LAYOUT

DRAWN BY: A LAWTHER

APPROVED BY: [illegible]

DATE: 3 MAY '8[illegible]

TITLE: EFFECTS CONTROL PCB

DRAWING NO: 2210-41

RVS 210

ISSUE 3 SHEET 1 OF 2 SHEETS

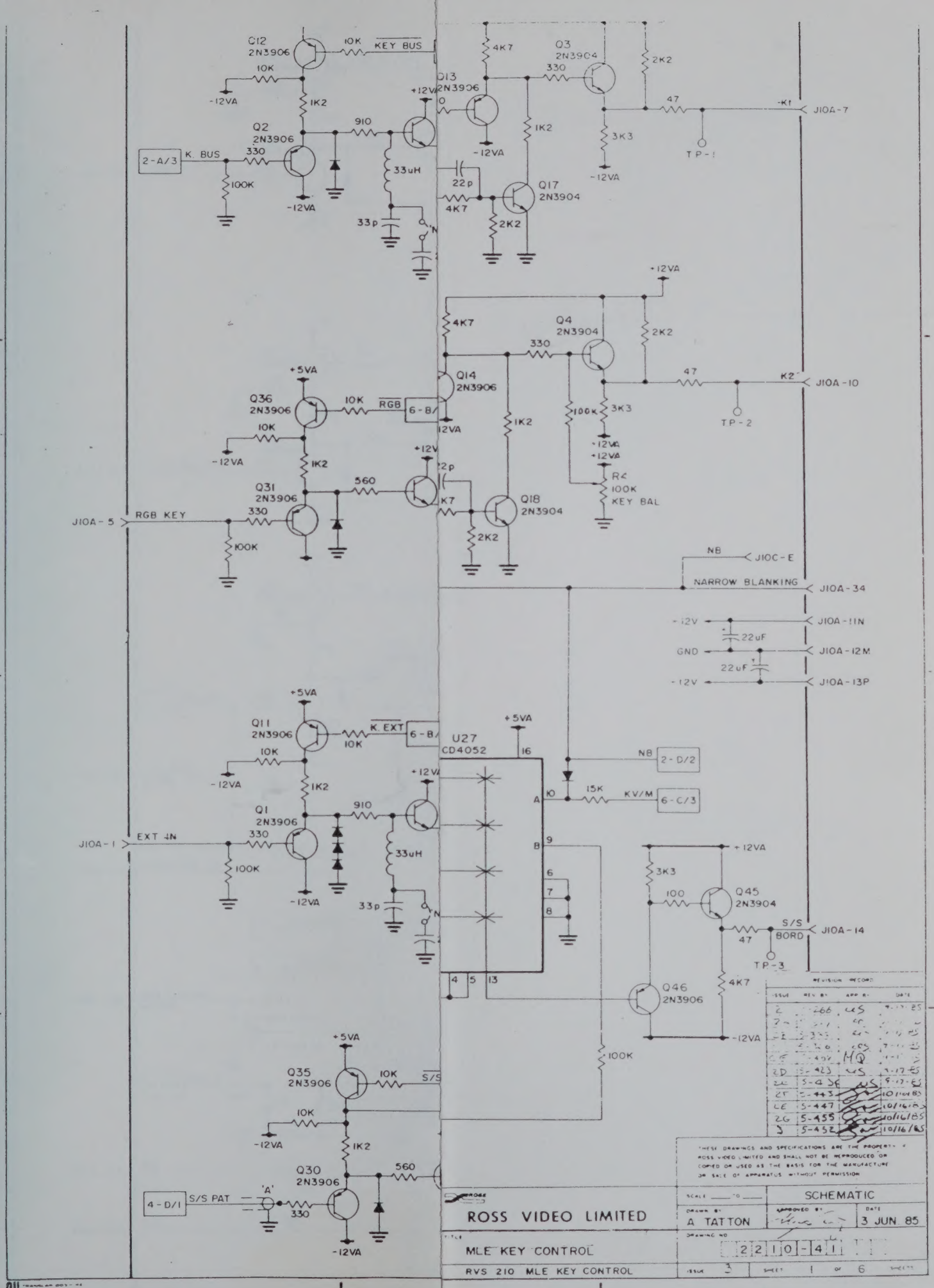
Q12 2N3906
10K
KEY BUS
10K
-12VA
1K2
Q2 2N3906
910
+12VA
2-A/3
K. BUS
330
100K
-12VA
33uH
33p
Q13 2N3906
4K7
Q3 2N3904
330
2K2
47
-K1
J10A-7
1K2
3K3
-12VA
TP-1
22p
4K7
Q17 2N3904
2K2
+12VA
Q4 2N3904
4K7
330
2K2
47
K2
J10A-10
Q14 2N3906
+5VA
Q36 2N3906
10K
RGB
6-B/
10K
-12VA
1K2
1K2
100K
3K3
TP-2
+12VA
+12VA
R4 100K KEY BAL
Q31 2N3906
560
Q18 2N3904
J10A-5
RGB KEY
330
100K
2K2
NB
J10C-E
NARROW BLANKING
J10A-34
-12V
J10A-11N
22uF
GND
J10A-12M
22uF
-12V
J10A-13P
+5VA
Q11 2N3906
K. EXT
6-B/
10K
10K
-12VA
1K2
U27 CD4052
+5VA
16
NB
2-D/2
15K
KV/M
6-C/3
Q1 2N3906
910
+12VA
J10A-1
EXT IN
330
100K
33uH
33p
-12VA
+12VA
3K3
100
Q45 2N3904
S/S BORD
J10A-14
47
TP-3
4K7
Q46 2N3906
-12VA
100K
+5VA
Q35 2N3906
10K
S/S
10K
-12VA
1K2
Q30 2N3906
560
4-D/1
S/S PAT
'A'
330
-12VA
REVISION RECORD
ISSUE REV BY APP BY DATE
2 266 US 9-17-85
2A 9-17-85
2B 3-323 9-17-85
2C 3-426 9-17-85
2D 3-492 MQ
2E 3-423 US 9-17-85
2F 3-424 US 9-17-85
2T 3-443 10/16/85
2E 3-447 10/16/85
2G 3-455 10/16/85
3 3-452 10/16/85
THESE DRAWINGS AND SPECIFICATIONS ARE THE PROPERTY OF ROSS VIDEO LIMITED AND SHALL NOT BE REPRODUCED OR COPIED OR USED AS THE BASIS FOR THE MANUFACTURE OR SALE OF APPARATUS WITHOUT PERMISSION
ROSS VIDEO LIMITED
SCALE TO
SCHEMATIC
DRAWN BY A TATTON
APPROVED BY
DATE 3 JUN 85
TITLE MLE KEY CONTROL
DRAWING NO 2210-41
RVS 210 MLE KEY CONTROL
ISSUE 3
SHEET 1 OF 6 SHEETS

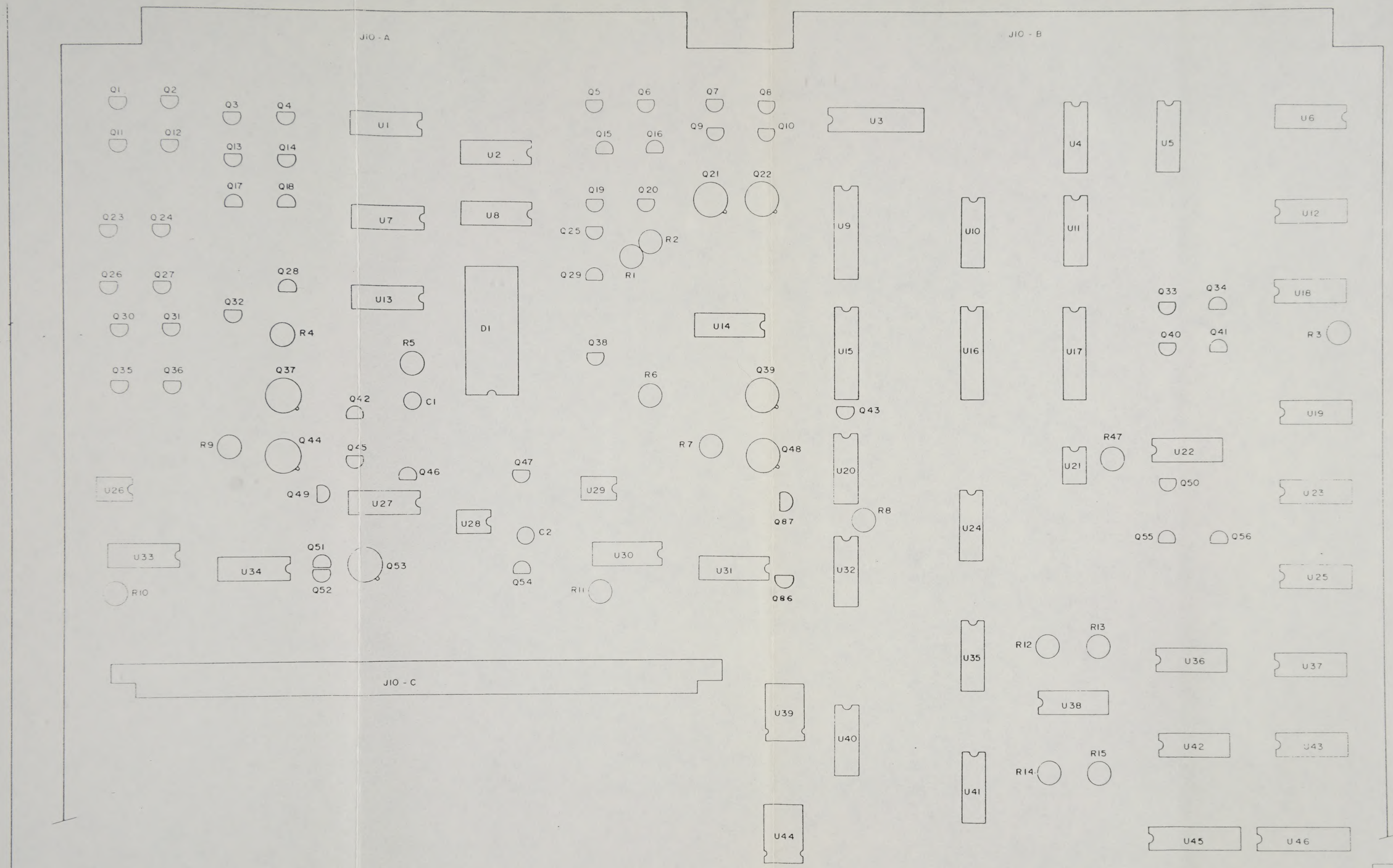

THIS SHEET

U1 - U46

R1 - R15

Q1 - Q56

C1, C2

Q86 & Q87

REVISION RECORD			
ISSUE	REV BY	APP BY	DATE
2E	[illegible]	[illegible]	[illegible]
2F	[illegible]	[illegible]	10/[illegible]
2G	[illegible]	[illegible]	[illegible]
3	[illegible]	[illegible]	10/[illegible]

THESE DRAWINGS AND SPECIFICATIONS ARE THE PROPERTY OF ROSS VIDEO LIMITED AND SHALL NOT BE REPRODUCED OR COPIED OR USED AS THE BASIS FOR THE MANUFACTURE OR SALE OF APPARATUS WITHOUT PERMISSION

ROSS VIDEO LIMITED

TITLE: EFFECTS CONTROL PCB

RVS 210

SCALE — TO —

PCB LAYOUT

DRAWN BY: A LAWTHER

APPROVED BY:

DATE: 3 MAY

DRAWING NO: 2210-41

ISSUE 3

SHEET 1 OF 2

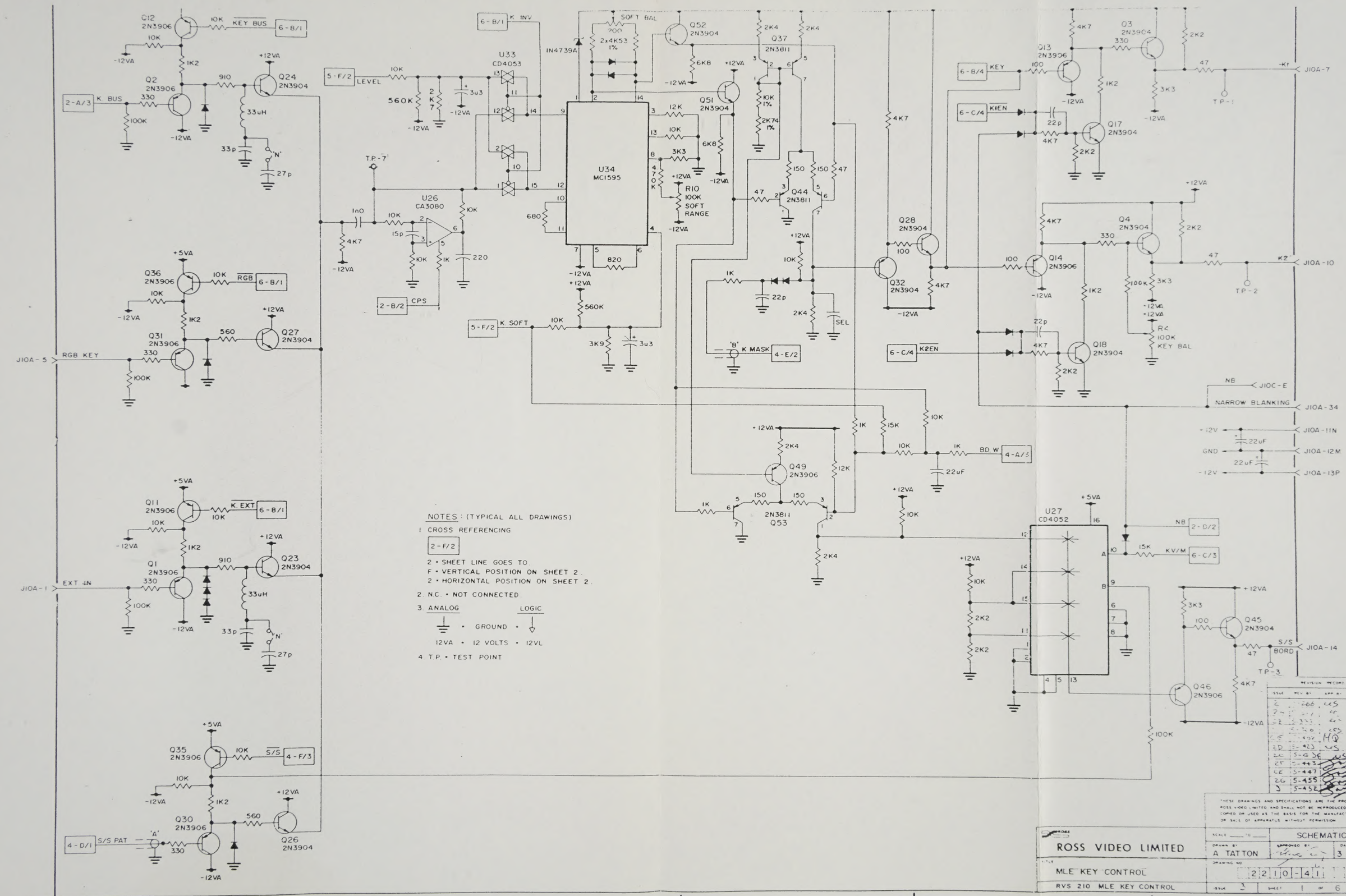

NOTES: (TYPICAL ALL DRAWINGS)

1. CROSS REFERENCING

   2-F/2

   2 = SHEET LINE GOES TO.
   F = VERTICAL POSITION ON SHEET 2.
   2 = HORIZONTAL POSITION ON SHEET 2.

2. N.C. = NOT CONNECTED.

3. ANALOG — GROUND — LOGIC

   12VA = 12 VOLTS = 12VL

4. T.P. = TEST POINT

REVISION RECORD

ISSUE	REV BY	APP BY	DATE
2	266	WS	9-17-85
2	[illegible]	[illegible]	[illegible]
2	3[illegible]	[illegible]	[illegible]
[illegible]	[illegible]	WS	[illegible]
[illegible]	[illegible]	MQ	[illegible]
2D	5-423	WS	9-17-85
2E	5-435	WS	9-17-85
2F	5-443	[illegible]	10/16/85
2E	5-447	[illegible]	10/16/85
2G	5-455	[illegible]	10/16/85
3	5-452	[illegible]	10/16/85

THESE DRAWINGS AND SPECIFICATIONS ARE THE PROPERTY OF ROSS VIDEO LIMITED AND SHALL NOT BE REPRODUCED OR COPIED OR USED AS THE BASIS FOR THE MANUFACTURE OR SALE OF APPARATUS WITHOUT PERMISSION

ROSS VIDEO LIMITED

SCHEMATIC

DRAWN BY: A TATTON

DATE: 3 JUN 85

TITLE: MLE KEY CONTROL

RVS 210 MLE KEY CONTROL

DRAWING NO: 2210-411

ISSUE 3 SHEET 1 OF 6 SHEETS

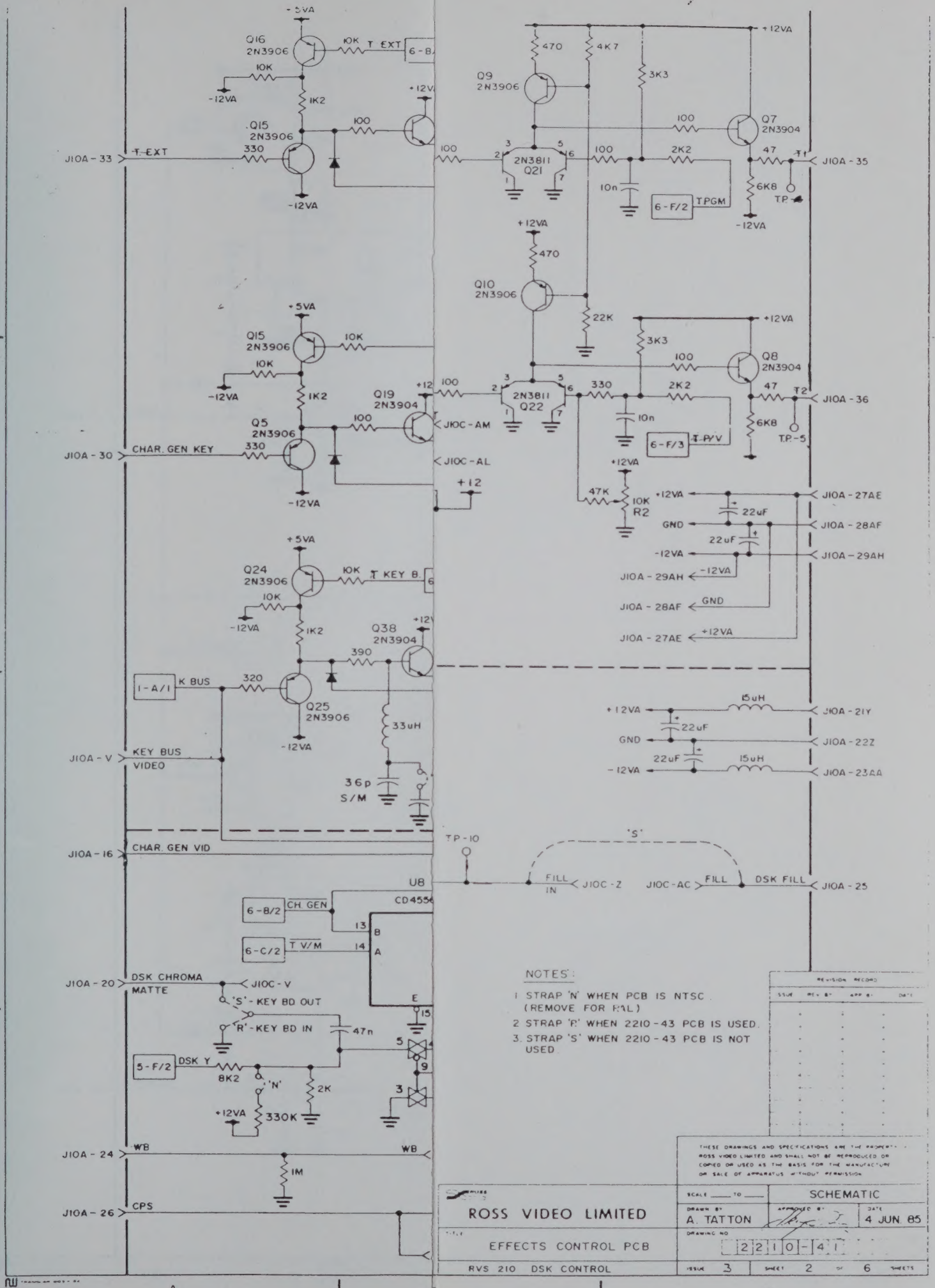

NOTES:

1. STRAP 'N' WHEN PCB IS NTSC. (REMOVE FOR PAL)
2. STRAP 'P' WHEN 2210-43 PCB IS USED.
3. STRAP 'S' WHEN 2210-43 PCB IS NOT USED.

REVISION RECORD			
ISSUE	REV BY	APP BY	DATE

THESE DRAWINGS AND SPECIFICATIONS ARE THE PROPERTY OF ROSS VIDEO LIMITED AND SHALL NOT BE REPRODUCED OR COPIED OR USED AS THE BASIS FOR THE MANUFACTURE OR SALE OF APPARATUS WITHOUT PERMISSION.

ROSS VIDEO LIMITED

TITLE: EFFECTS CONTROL PCB

RVS 210 DSK CONTROL

SCALE ____ TO ____

SCHEMATIC

DRAWN BY: A. TATTON

APPROVED BY:

DATE: 4 JUN 85

DRAWING NO: 2210-41

ISSUE 3 SHEET 2 OF 6 SHEETS

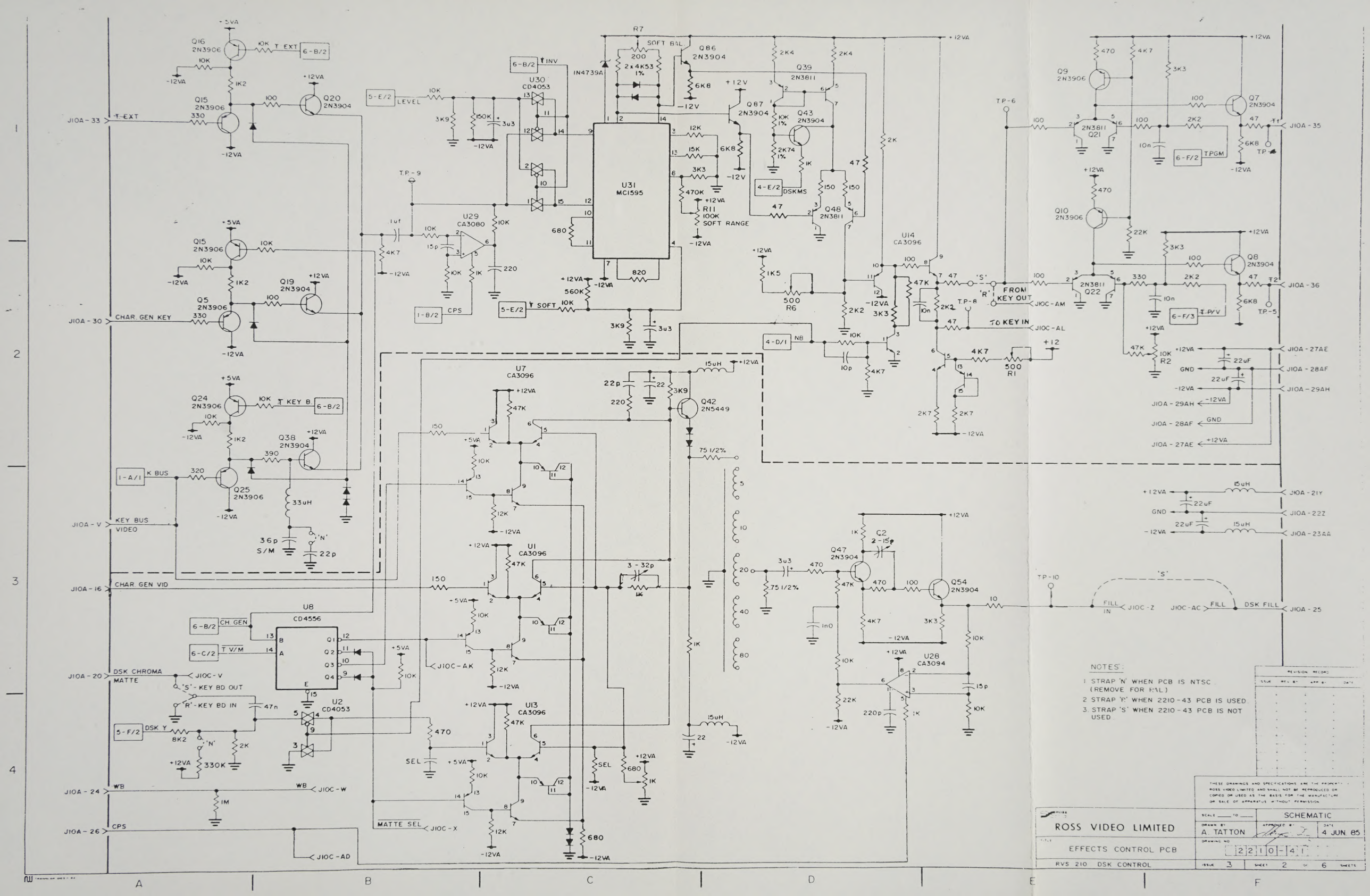
U31
MC1595
U29
CA3080
U30
CD4053
U14
CA3096
U7
CA3096
U1
CA3096
U13
CA3096
U8
CD4556
U2
CD4053
U28
CA3094
Q86
2N3904
Q39
2N3811
Q87
2N3904
Q43
2N3904
Q48
2N3811
Q9
2N3906
Q7
2N3904
Q21
2N3811
Q10
2N3906
Q8
2N3904
Q22
2N3811
Q16
2N3906
Q15
2N3906
Q20
2N3904
Q19
2N3904
Q5
2N3906
Q24
2N3906
Q38
2N3904
Q25
2N3906
Q42
2N5449
Q47
2N3904
Q54
2N3904
R7
SOFT BAL
R11
100K
SOFT RANGE
R6
500
R1
500
R2
10K
FROM KEY OUT
TO KEY IN
J10A - 33
EXT
J10A - 30
CHAR. GEN KEY
J10A - V
KEY BUS
VIDEO
J10A - 16
CHAR. GEN VID
J10A - 20
DSK CHROMA
MATTE
J10A - 24
WB
J10A - 26
CPS
J10A - 35
J10A - 36
J10A - 27AE
J10A - 28AF
J10A - 29AH
J10A - 21Y
J10A - 22Z
J10A - 23AA
J10A - 25
J10C - AD
J10C - X
J10C - W
J10C - V
J10C - AK
J10C - AM
J10C - AL
J10C - Z
J10C - AC
DSK FILL
MATTE SEL
SEL
NOTES:
1. STRAP 'N' WHEN PCB IS NTSC (REMOVE FOR PAL)
2. STRAP 'P' WHEN 2210-43 PCB IS USED.
3. STRAP 'S' WHEN 2210-43 PCB IS NOT USED.
ROSS VIDEO LIMITED
SCHEMATIC
A. TATTON
4 JUN 85
EFFECTS CONTROL PCB
2210-41
RVS 210 DSK CONTROL
3
2
6

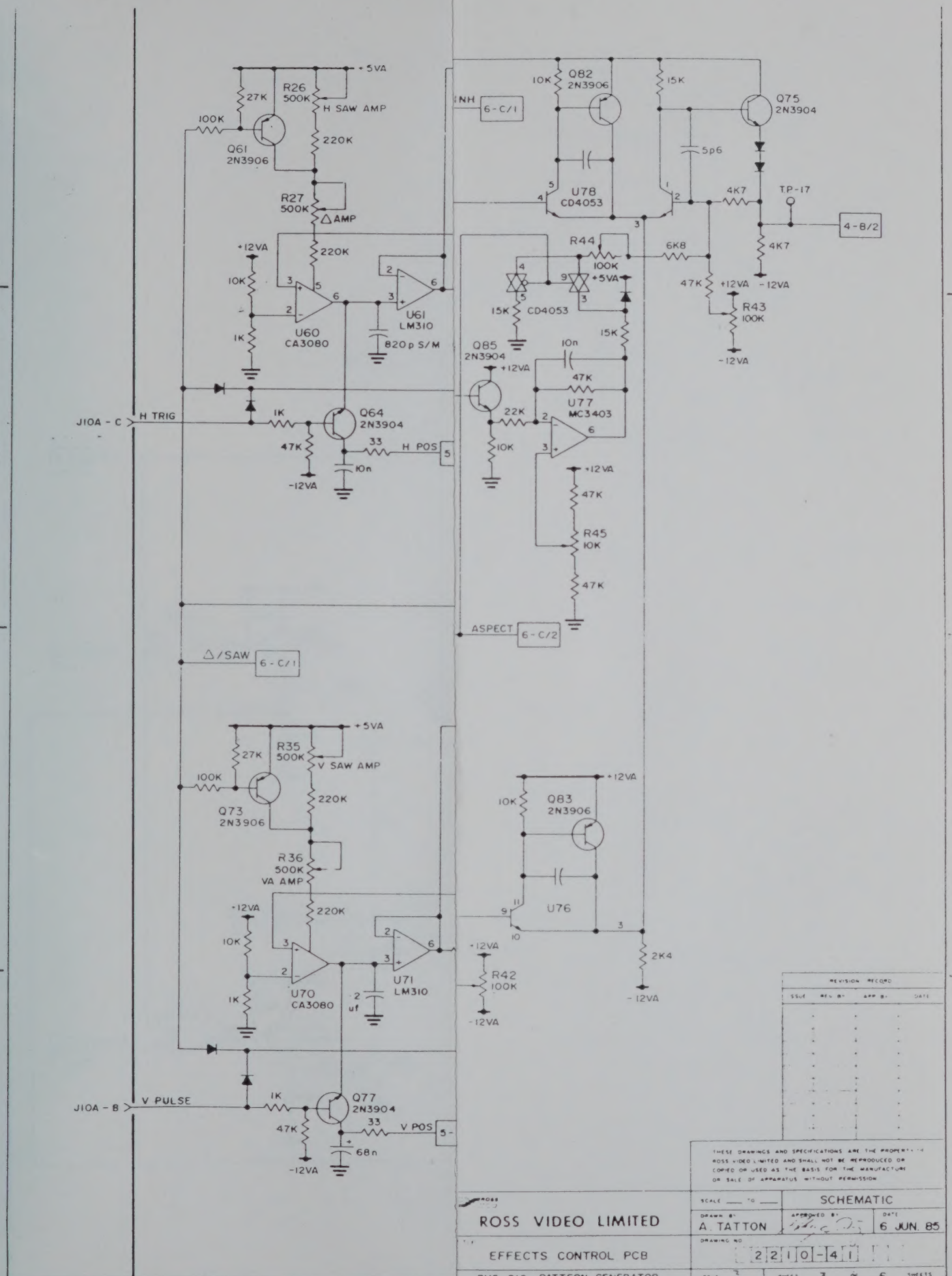

REVISION RECORD			
ISSUE	REV BY	APP BY	DATE

THESE DRAWINGS AND SPECIFICATIONS ARE THE PROPERTY OF ROSS VIDEO LIMITED AND SHALL NOT BE REPRODUCED OR COPIED OR USED AS THE BASIS FOR THE MANUFACTURE OR SALE OF APPARATUS WITHOUT PERMISSION

ROSS VIDEO LIMITED

EFFECTS CONTROL PCB

RVS 210 PATTERN GENERATOR

SCALE ___ TO ___	SCHEMATIC	
DRAWN BY: A. TATTON	APPROVED BY:	DATE: 6 JUN. 85
DRAWING NO. 2210-41		
ISSUE 2	SHEET 3 OF 6 SHEETS	

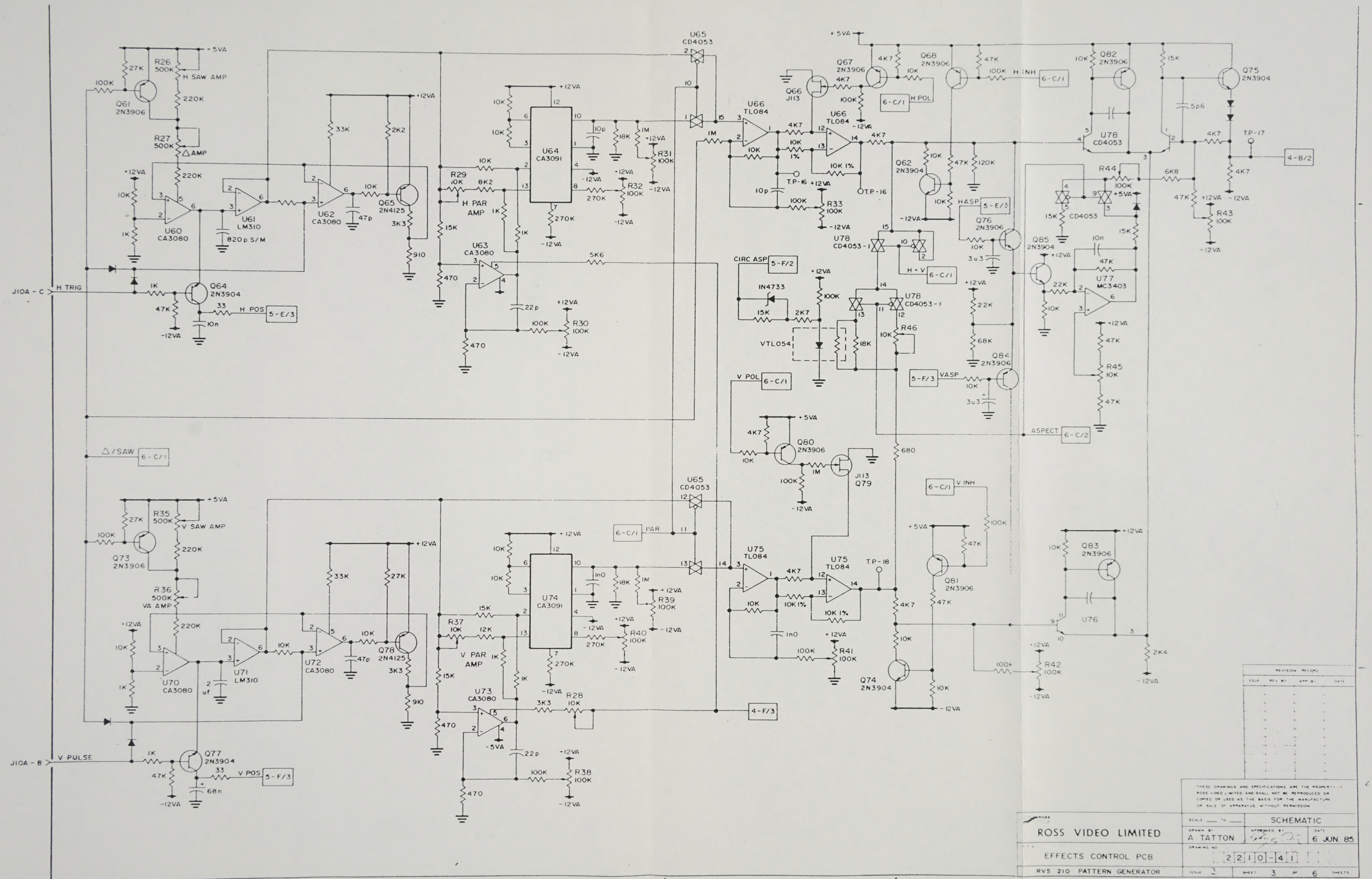
J10A - C
H TRIG
J10A - B
V PULSE
H SAW AMP
Δ AMP
H PAR AMP
H POS
H INH
H POL
CIRC ASP
H + V
HASP
VASP
ASPECT
Δ/SAW
V SAW AMP
VA AMP
V PAR AMP
V POS
PAR
V INH
V POL
TP-16
TP-17
TP-18
U60 CA3080
U61 LM310
U62 CA3080
U63 CA3080
U64 CA3091
U65 CD4053
U66 TL084
U70 CA3080
U71 LM310
U72 CA3080
U73 CA3080
U74 CA3091
U75 TL084
U76
U77 MC3403
U78 CD4053
Q61 2N3906
Q62 2N3904
Q64 2N3904
Q65 2N4125
Q67 2N3906
Q68 2N3906
Q73 2N3906
Q74 2N3904
Q75 2N3904
Q76 2N3906
Q77 2N3904
Q78 2N4125
Q79 J113
Q80 2N3906
Q81 2N3906
Q82 2N3906
Q83 2N3906
Q84 2N3906
Q85 2N3904
Q66 J113
R26 500K
R27 500K
R35 500K
R36 500K
R29 10K
R30 100K
R31 100K
R32 100K
R33 100K
R37 10K
R38 100K
R39 100K
R40 100K
R41 100K
R42 100K
R43 100K
R44 100K
R45 10K
R46 10K
IN4733
VTL054
REVISION RECORD
ISSUE REV BY APP BY DATE
THESE DRAWINGS AND SPECIFICATIONS ARE THE PROPERTY OF ROSS VIDEO LIMITED AND SHALL NOT BE REPRODUCED OR COPIED OR USED AS THE BASIS FOR THE MANUFACTURE OR SALE OF APPARATUS WITHOUT PERMISSION
ROSS VIDEO LIMITED
EFFECTS CONTROL PCB
RVS 210 PATTERN GENERATOR
SCHEMATIC
DRAWN BY A TATTON
APPROVED BY
DATE 6 JUN 85
DRAWING NO 22101-41
ISSUE 3
SHEET 3 OF 6 SHEETS

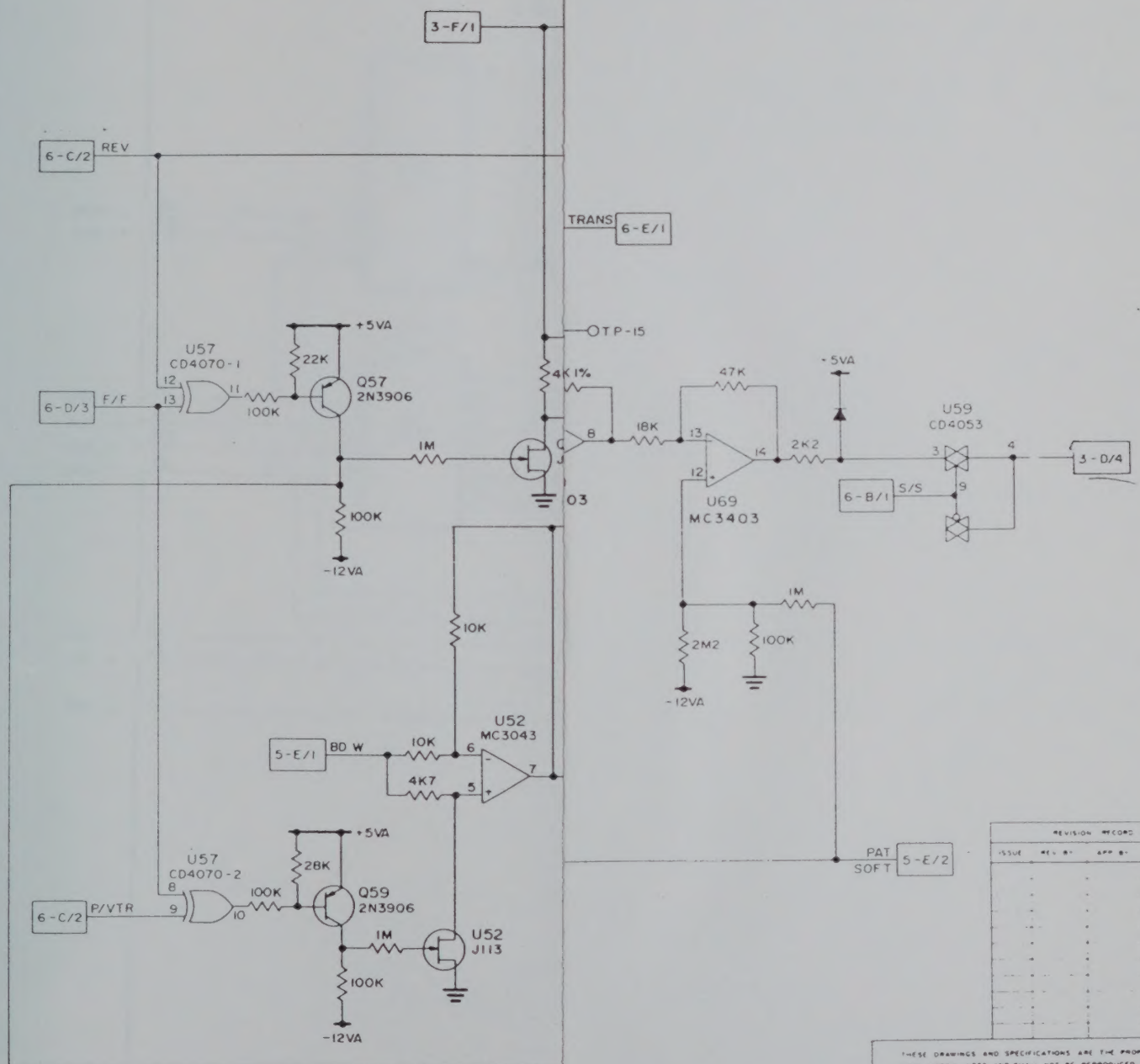

REVISION RECORD			
ISSUE	REV BY	APP BY	DATE

THESE DRAWINGS AND SPECIFICATIONS ARE THE PROPERTY OF ROSS VIDEO LIMITED AND SHALL NOT BE REPRODUCED OR COPIED OR USED AS THE BASIS FOR THE MANUFACTURE OR SALE OF APPARATUS WITHOUT PERMISSION

ROSS VIDEO LIMITED

SCALE ___ TO ___

SCHEMATIC

DRAWN BY: A. TATTON

APPROVED BY:

DATE: 7 JUN 85

TITLE: EFFECTS CONTROL PCB

DRAWING NO: 2210-41

RVS 210 PATTERN GENERATOR

ISSUE 3 SHEET 4 OF 6 SHEETS

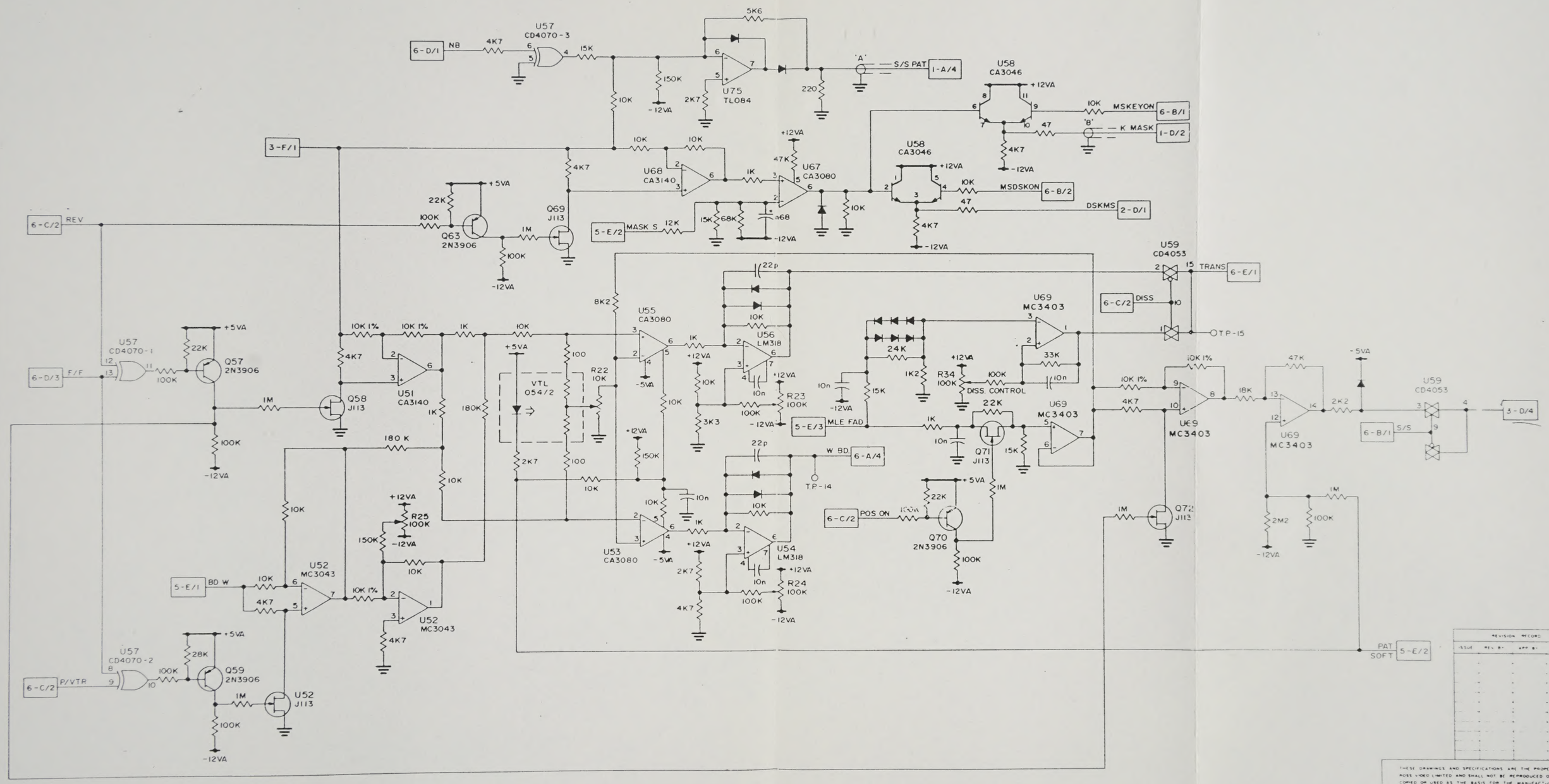

REVISION RECORD

ISSUE	REV. BY	APP. BY	DATE

THESE DRAWINGS AND SPECIFICATIONS ARE THE PROPERTY OF ROSS VIDEO LIMITED AND SHALL NOT BE REPRODUCED OR COPIED OR USED AS THE BASIS FOR THE MANUFACTURE OR SALE OF APPARATUS WITHOUT PERMISSION

ROSS VIDEO LIMITED

SCALE ___ TO ___

SCHEMATIC

DRAWN BY: A. TATTON

APPROVED BY:

DATE: 7 JUN 85

TITLE: EFFECTS CONTROL PCB

RVS 210 PATTERN GENERATOR

DRAWING NO: 2210-41

ISSUE 3 SHEET 4 OF 6 SHEETS

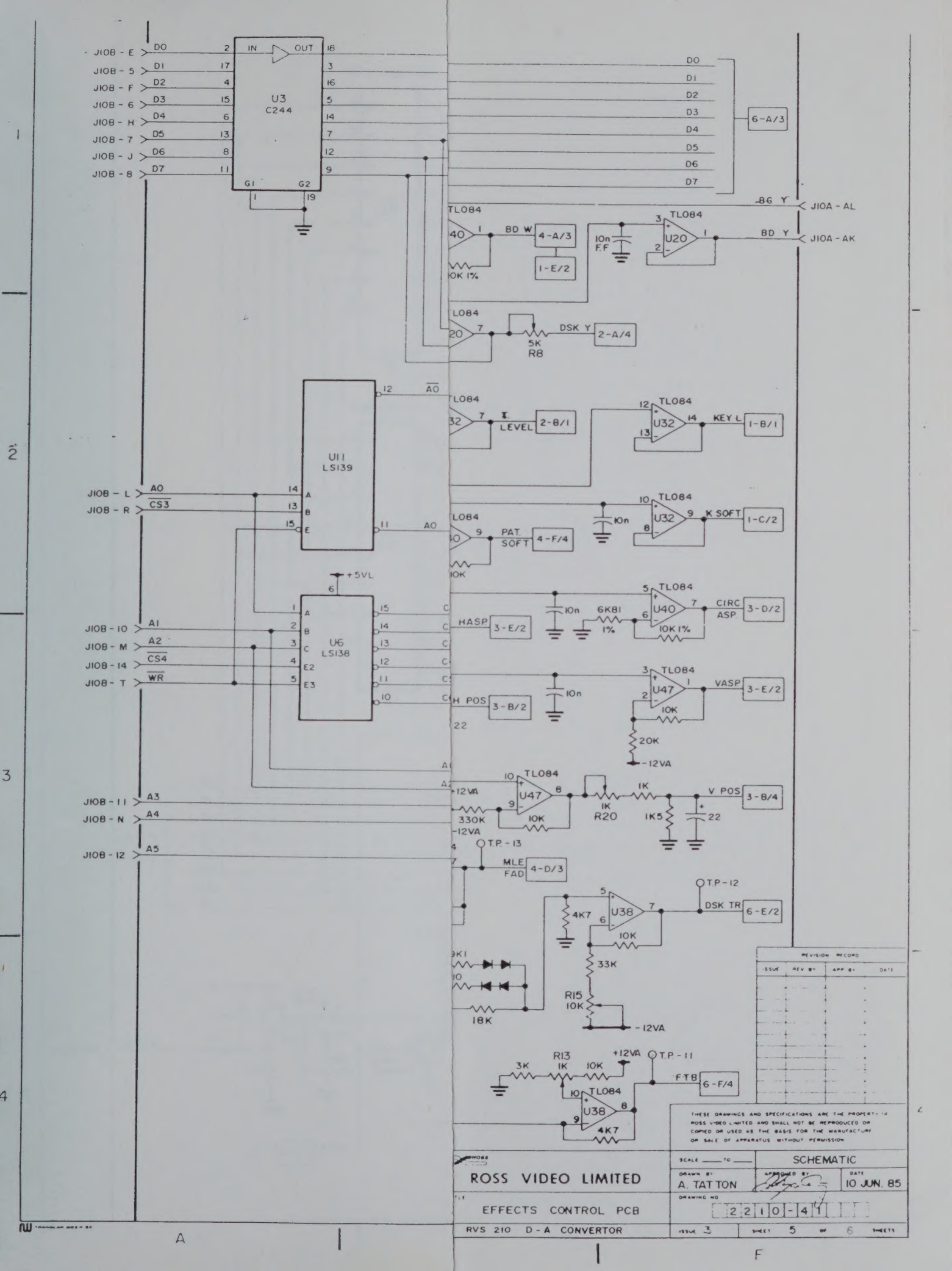
U3
C244
IN
OUT
G1
G2
J10B - E
J10B - 5
J10B - F
J10B - 6
J10B - H
J10B - 7
J10B - J
J10B - 8
D0
D1
D2
D3
D4
D5
D6
D7
6-A/3
BG Y
J10A - AL
BD W
4-A/3
1-E/2
10n F.F
U20
BD Y
J10A - AK
DSK Y
2-A/4
5K R8
U11
LS139
A0
CS3
J10B - L
J10B - R
LEVEL
2-B/1
U32
KEY L
1-B/1
PAT. SOFT
4-F/4
K SOFT
1-C/2
+5VL
U6
LS138
A1
A2
CS4
WR
J10B - 10
J10B - M
J10B - 14
J10B - T
HASP
3-E/2
6K81 1%
10K 1%
U40
CIRC ASP.
3-D/2
H POS
3-B/2
U47
VASP
3-E/2
20K
-12VA
+12VA
330K
10K
1K R20
1K5
V POS
3-B/4
A3
A4
A5
J10B - 11
J10B - N
J10B - 12
T.P. - 13
MLE FAD
4-D/3
T.P. - 12
DSK TR
6-E/2
U38
4K7
33K
R15 10K
18K
T.P. - 11
FTB
6-F/4
3K
R13 1K
REVISION RECORD
ISSUE
REV BY
APP BY
DATE
THESE DRAWINGS AND SPECIFICATIONS ARE THE PROPERTY OF ROSS VIDEO LIMITED AND SHALL NOT BE REPRODUCED OR COPIED OR USED AS THE BASIS FOR THE MANUFACTURE OR SALE OF APPARATUS WITHOUT PERMISSION
ROSS VIDEO LIMITED
SCALE TO
SCHEMATIC
DRAWN BY
A. TATTON
APPROVED BY
DATE
10 JUN. 85
EFFECTS CONTROL PCB
DRAWING NO
2210-41
RVS 210 D-A CONVERTOR
ISSUE 3
SHEET 5 OF 6 SHEETS

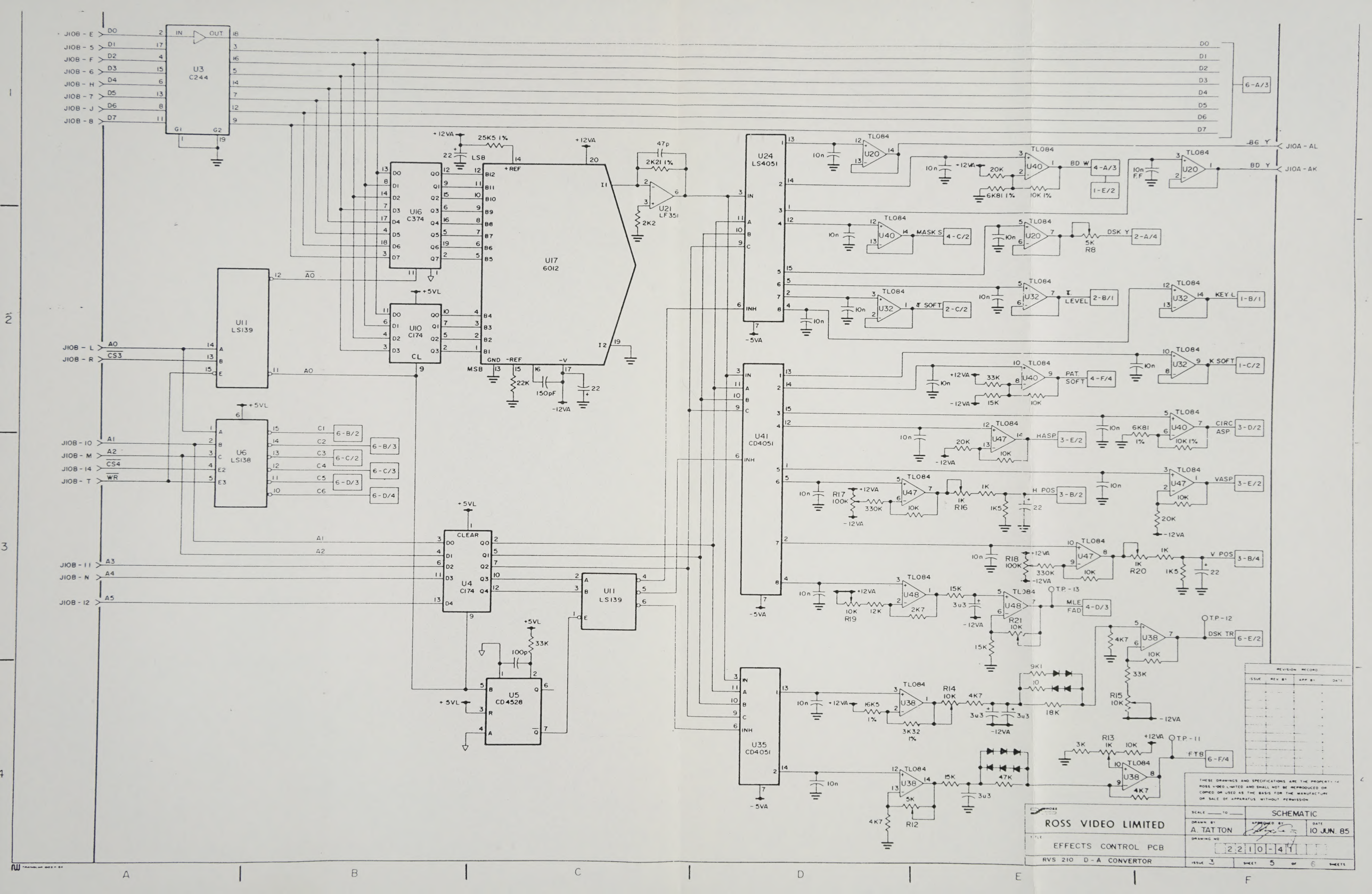
U3 C244
U16 C374
U10 C174
U17 6012
U11 LS139
U6 LS138
U4 CI74
U5 CD4528
U24 LS4051
U41 CD4051
U35 CD4051
U21 LF351
TL084
ROSS VIDEO LIMITED
EFFECTS CONTROL PCB
RVS 210 D-A CONVERTOR
SCHEMATIC
A. TATTON
10 JUN. 85
2210-41
ISSUE 3
SHEET 5 OF 6 SHEETS

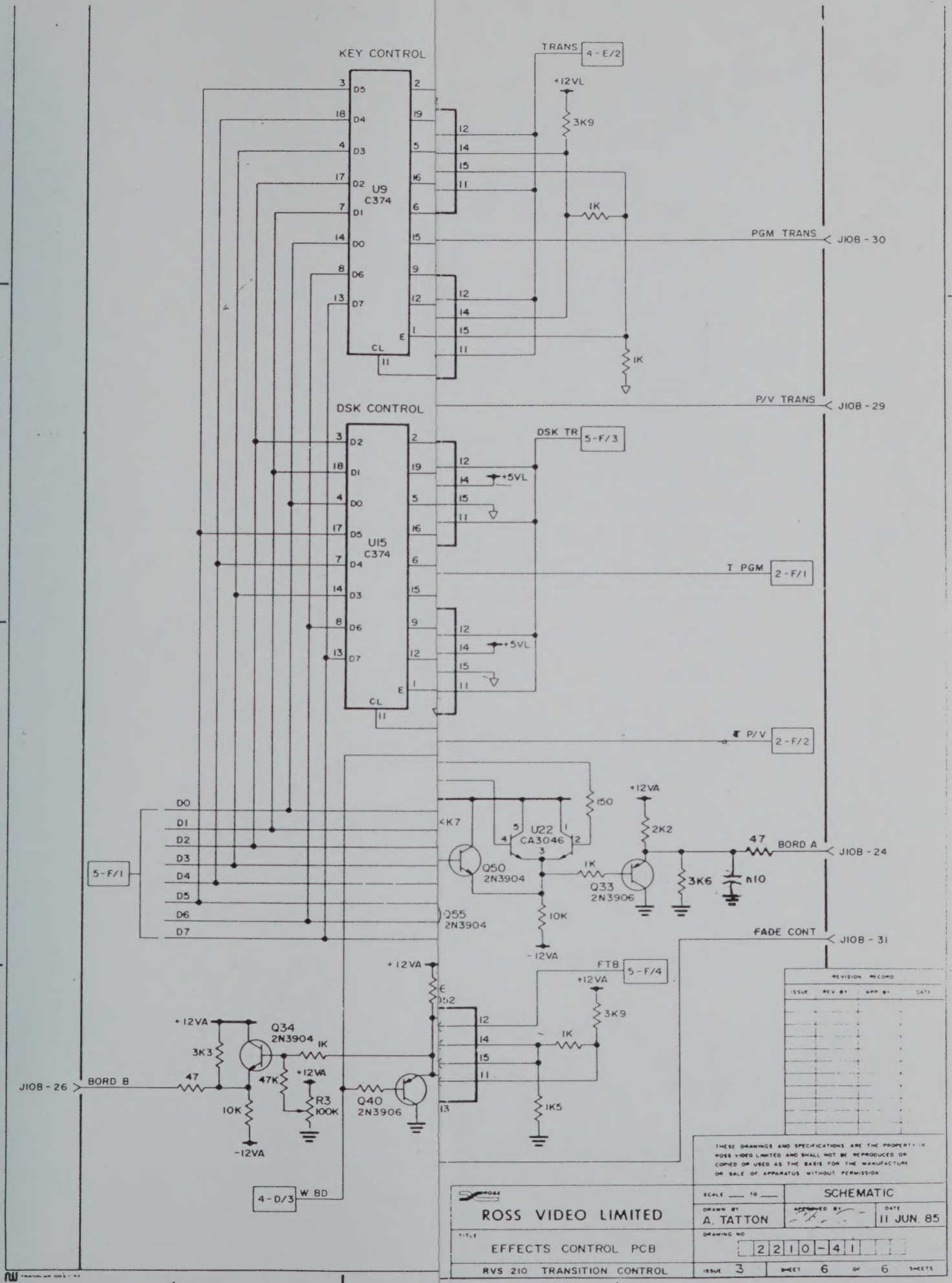
KEY CONTROL
U9
C374
TRANS
4-E/2
+12VL
3K9
1K
PGM TRANS
J10B-30
P/V TRANS
J10B-29
DSK CONTROL
U15
C374
DSK TR
5-F/3
+5VL
T PGM
2-F/1
P/V
2-F/2
5-F/1
U22
CA3046
150
+12VA
2K2
47
BORD A
J10B-24
Q50
2N3904
Q33
2N3906
3K6
n10
10K
-12VA
Q55
2N3904
FADE CONT
J10B-31
FTB
5-F/4
3K9
1K5
Q34
2N3904
3K3
47K
R3
100K
J10B-26
BORD B
Q40
2N3906
4-D/3
W BD
REVISION RECORD
ISSUE
REV BY
APP BY
DATE
THESE DRAWINGS AND SPECIFICATIONS ARE THE PROPERTY OF ROSS VIDEO LIMITED AND SHALL NOT BE REPRODUCED OR COPIED OR USED AS THE BASIS FOR THE MANUFACTURE OR SALE OF APPARATUS WITHOUT PERMISSION
ROSS VIDEO LIMITED
SCALE
TO
SCHEMATIC
DRAWN BY
A. TATTON
APPROVED BY
DATE
11 JUN. 85
TITLE
EFFECTS CONTROL PCB
DRAWING NO
2210-41
RVS 210 TRANSITION CONTROL
ISSUE 3
SHEET 6 OF 6 SHEETS

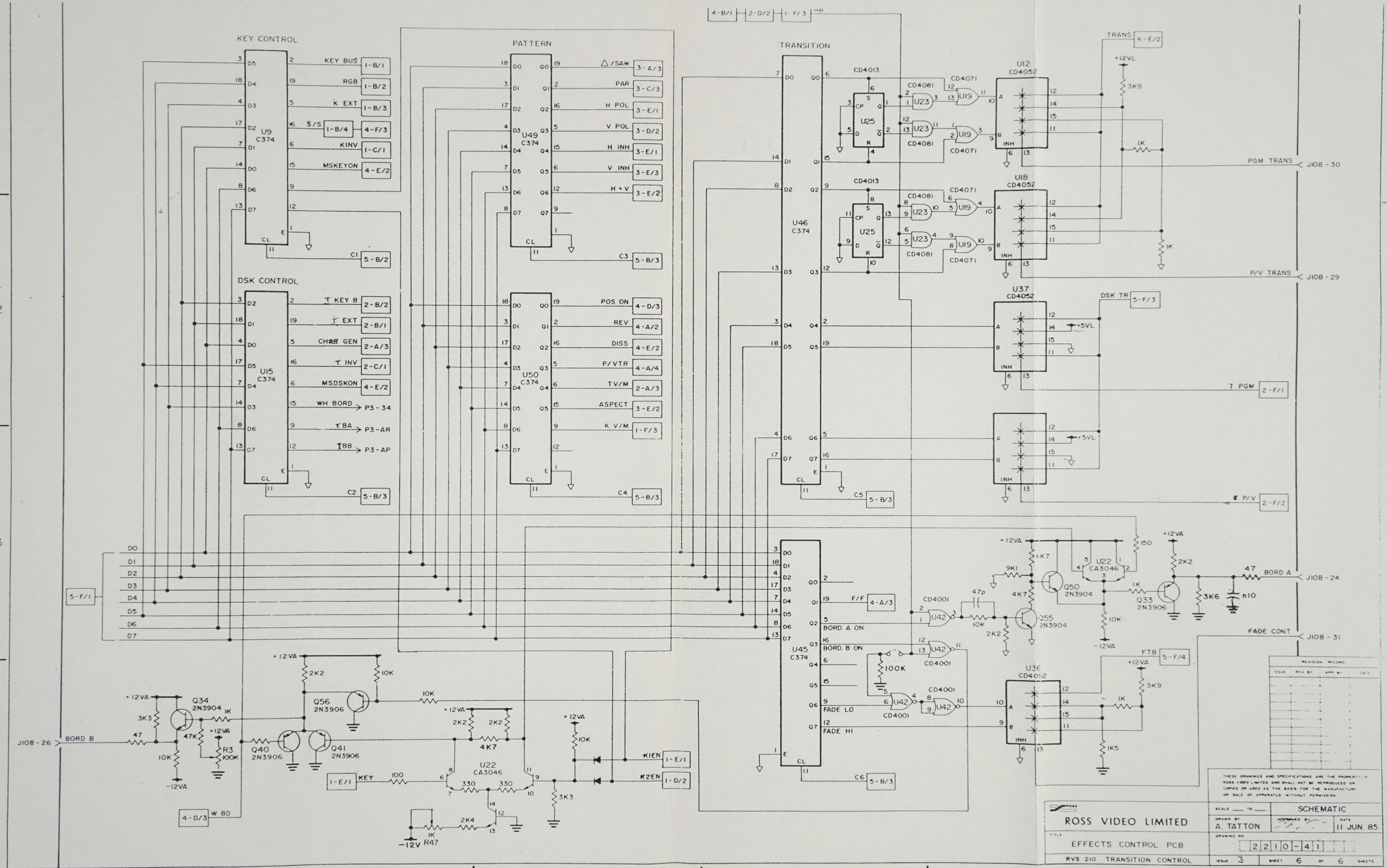
KEY CONTROL
U9 C374
KEY BUS 1-B/1
RGB 1-B/2
K EXT 1-B/3
S/S 1-B/4 4-F/3
KINV 1-C/1
MSKEYON 4-E/2
C1 5-B/2
DSK CONTROL
U15 C374
T KEY B 2-B/2
T EXT 2-B/1
CHAR GEN 2-A/3
T INV 2-C/1
MSDSKON 4-E/2
WH BORD P3-34
T BA P3-AR
T BB P3-AP
C2 5-B/3
PATTERN
U49 C374
△/SAW 3-A/3
PAR 3-C/3
H POL 3-E/1
V POL 3-D/2
H INH 3-E/1
V INH 3-E/3
H+V 3-E/2
C3 5-B/3
U50 C374
POS ON 4-D/3
REV 4-A/2
DISS 4-E/2
P/VTR 4-A/4
TV/M 2-A/3
ASPECT 3-E/2
K V/M 1-F/3
C4 5-B/3
TRANSITION
U46 C374
C5 5-B/3
U45 C374
F/F 4-A/3
BORD A ON
BORD B ON
FADE LO
FADE HI
C6 5-B/3
U12 CD4052
U18 CD4052
U37 CD4052
U36 CD4052
TRANS 4-E/2
DSK TR 5-F/3
T PGM 2-F/1
T P/V 2-F/2
PGM TRANS J10B-30
P/V TRANS J10B-29
BORD A J10B-24
FADE CONT J10B-31
FTB 5-F/4
BORD B J10B-26
KIEN 1-E/1
K2EN 1-D/2
KEY 1-E/1
W BD 4-D/3
5-F/1
Q34 2N3904
Q56 2N3906
Q40 2N3906
Q41 2N3906
U22 CA3046
Q50 2N3904
Q55 2N3904
Q33 2N3906
R3 100K
R47 1K
REVISION RECORD
THESE DRAWINGS AND SPECIFICATIONS ARE THE PROPERTY OF ROSS VIDEO LIMITED AND SHALL NOT BE REPRODUCED OR COPIED OR USED AS THE BASIS FOR THE MANUFACTURE OR SALE OF APPARATUS WITHOUT PERMISSION
ROSS VIDEO LIMITED
SCHEMATIC
A. TATTON
11 JUN. 85
EFFECTS CONTROL PCB
2210-41
RVS 210 TRANSITION CONTROL
ISSUE 3
SHEET 6 OF 6 SHEETS

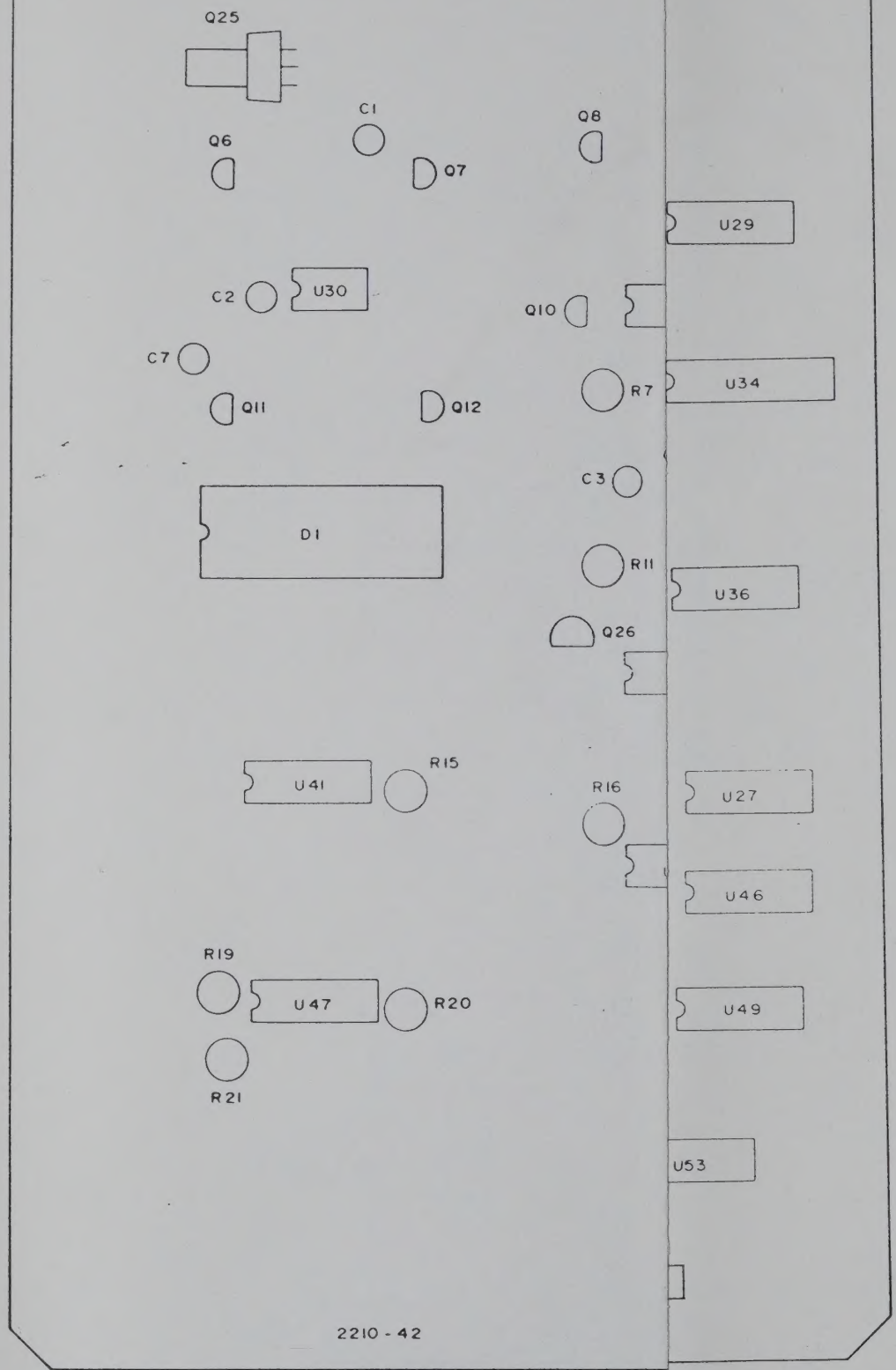

THIS SHEET

U27 - U53

R5 - R22, R24

Q6 - Q25

C1 - C7

REVISION RECORD			
ISSUE	REV BY	APP BY	DATE

THESE DRAWINGS AND SPECIFICATIONS ARE THE PROPERTY OF RODE VIDEO LIMITED AND SHALL NOT BE REPRODUCED OR COPIED OR USED AS THE BASIS FOR THE MANUFACTURE OR SALE OF APPARATUS WITHOUT PERMISSION

S VIDEO LIMITED

ME CONTROL PCB

SCALE — TO —	PCB LAYOUT	
DRAWN BY A. LAWTHER	APPROVED BY	DATE 3 MAY '85
DRAWING NO 2210-42		
ISSUE 2M	SHEET 2 OF 2 SHEETS	

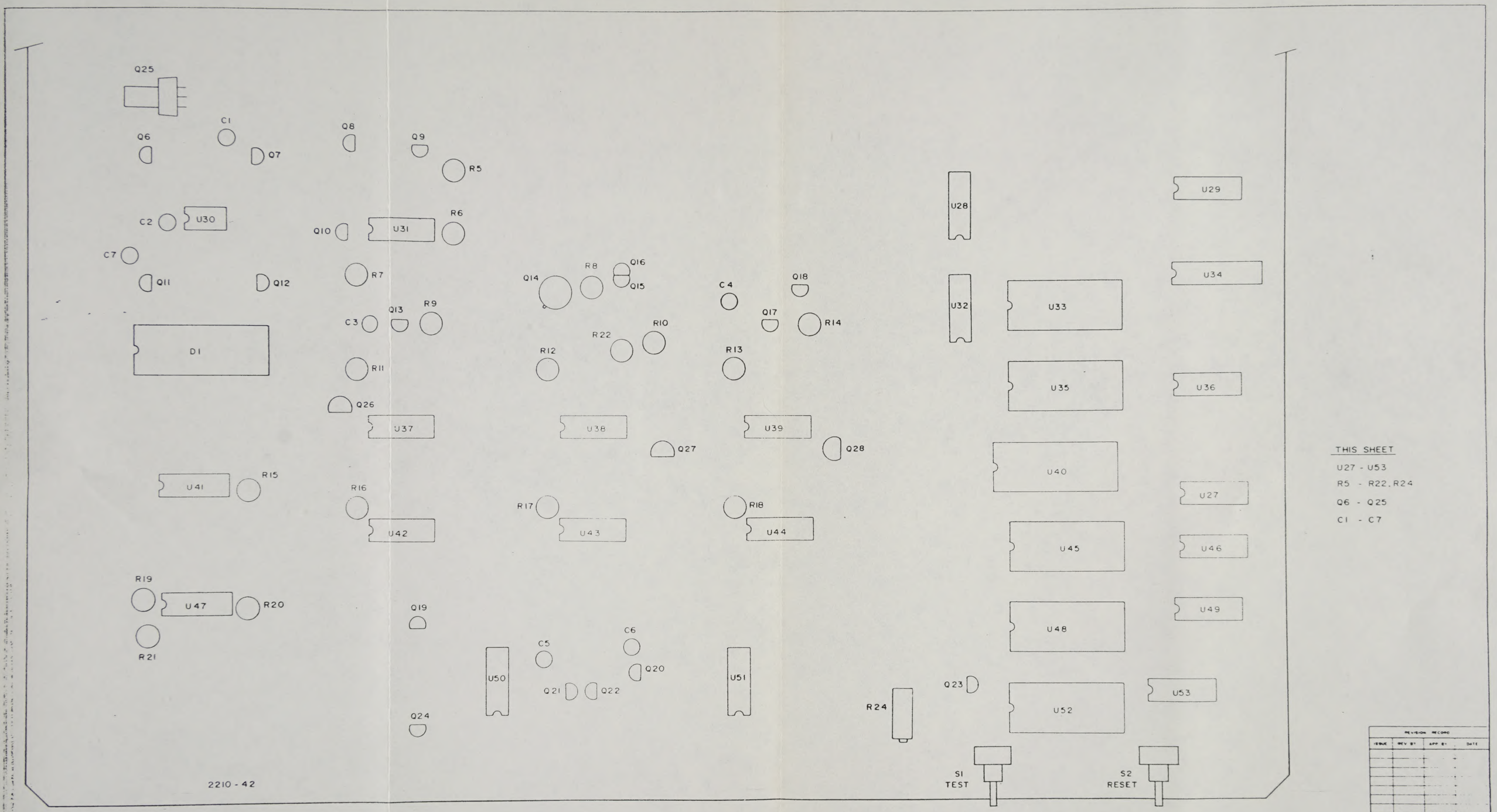

REVISION RECORD			
ISSUE	REV BY	APP BY	DATE

THESE DRAWINGS AND SPECIFICATIONS ARE THE PROPERTY OF ROSS VIDEO LIMITED AND SHALL NOT BE REPRODUCED OR COPIED OR USED AS THE BASIS FOR THE MANUFACTURE OR SALE OF APPARATUS WITHOUT PERMISSION

ROSS VIDEO LIMITED	SCALE — TO —	PCB LAYOUT
	DRAWN BY A. LAWTHER	APPROVED BY	DATE 3 MAY '85
TITLE FRAME CONTROL PCB	DRAWING NO 2210-42	
RVS 210	ISSUE 2M	SHEET 2 OF 2 SHEETS

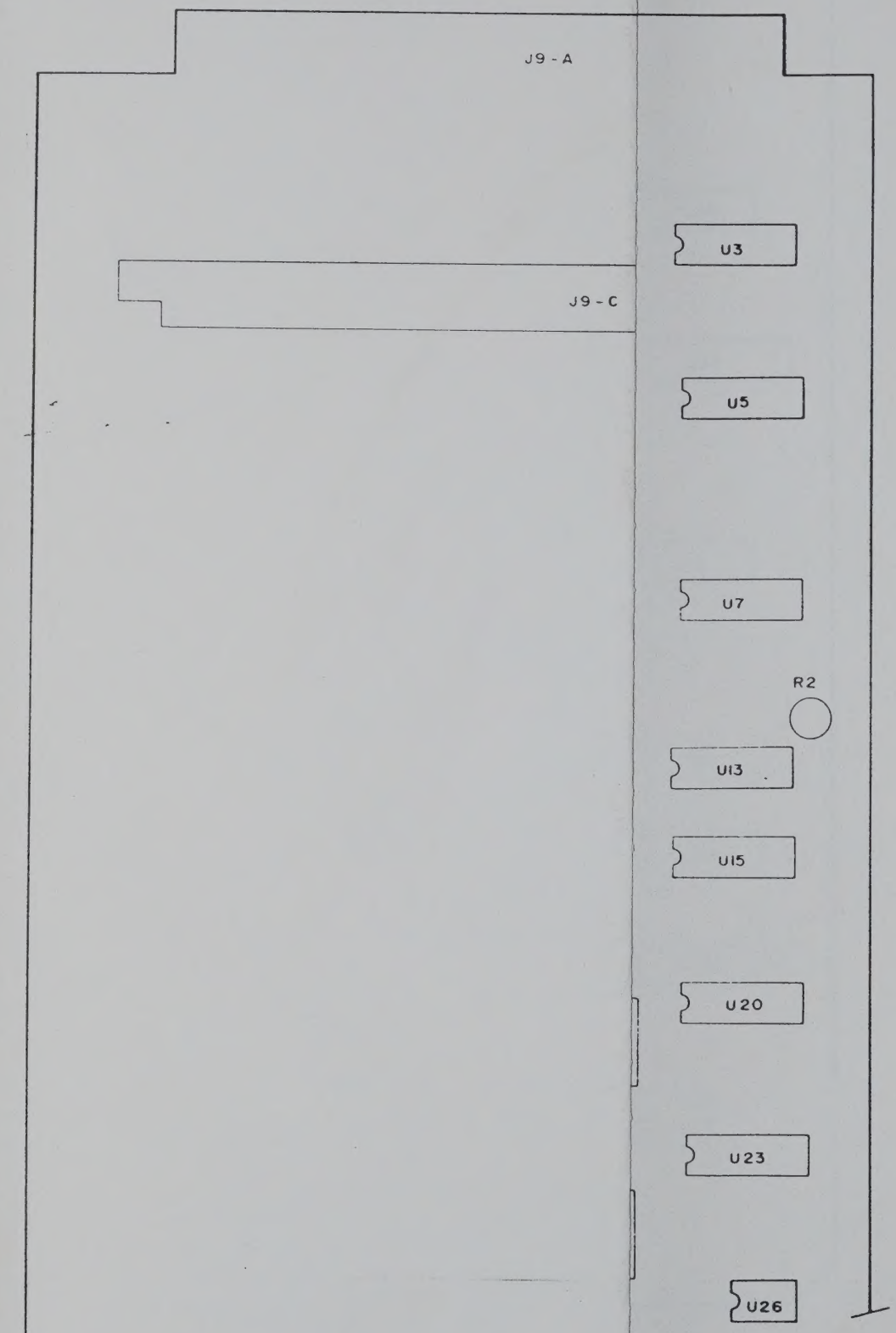

THIS SHEET

U1 - U26

R1 - R4, R23

Q1 - Q5

REVISION RECORD

ISSUE	REV BY	APP BY	DATE
2M	S-587	US	
2H	S-491	US	12/3/85
CE	S-550	US	12/3/85
2J	S-568	US	12/3/85
2K	S-569	US	12/3/85
2L	S-573	US	12/3/85
CE	6-039	AGT	1/28/86

THESE DRAWINGS AND SPECIFICATIONS ARE THE PROPERTY OF ROSS VIDEO LIMITED AND SHALL NOT BE REPRODUCED OR COPIED OR USED AS THE BASIS FOR THE MANUFACTURE OR SALE OF APPARATUS WITHOUT PERMISSION

SS VIDEO LIMITED

ME CONTROL PCB

0

SCALE — TO — PCB LAYOUT

DRAWN BY A. LAWTHER

APPROVED BY

DATE 3 MAY '85

DRAWING NO 2210-42

ISSUE 2M SHEET 1 OF 2 SHEETS

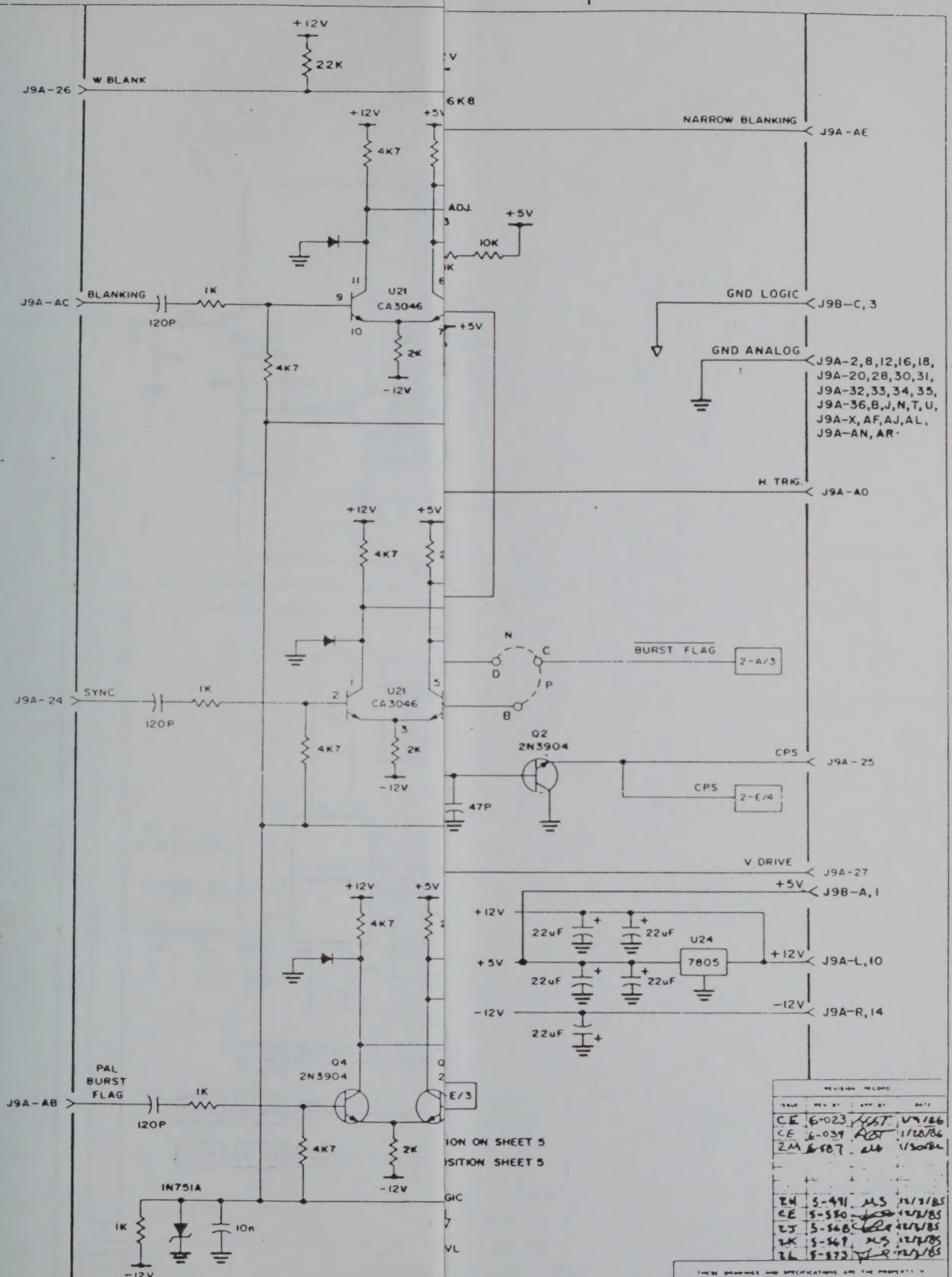
+12V
22K
J9A-26
W BLANK
6K8
+12V
+5V
4K7
NARROW BLANKING
J9A-AE
ADJ.
+5V
10K
J9A-AC
BLANKING
1K
120P
U21
CA3046
GND LOGIC
J9B-C, 3
2K
-12V
GND ANALOG
J9A-2,8,12,16,18,
J9A-20,28,30,31,
J9A-32,33,34,35,
J9A-36,B,J,N,T,U,
J9A-X,AF,AJ,AL,
J9A-AN,AR
H. TRIG.
J9A-AD
BURST FLAG
2-A/3
J9A-24
SYNC
Q2
2N3904
CPS
J9A-25
2-E/4
47P
V DRIVE
J9A-27
J9B-A,1
22uF
U24
7805
J9A-L,10
J9A-R,14
Q4
2N3904
PAL
BURST
FLAG
J9A-AB
IN751A
10n
-12V
ION ON SHEET 5
SITION SHEET 5
GIC
VL
E INDICATED, ALL DIODES ARE IN4148
ROSS VIDEO LIMITED
FRAME CONTROL PCB
PULSE BUFFER
SCHEMATIC
J. M.
JUNE 24, '85
2210-42
2M
SHEET 1 OF 7 SHEETS

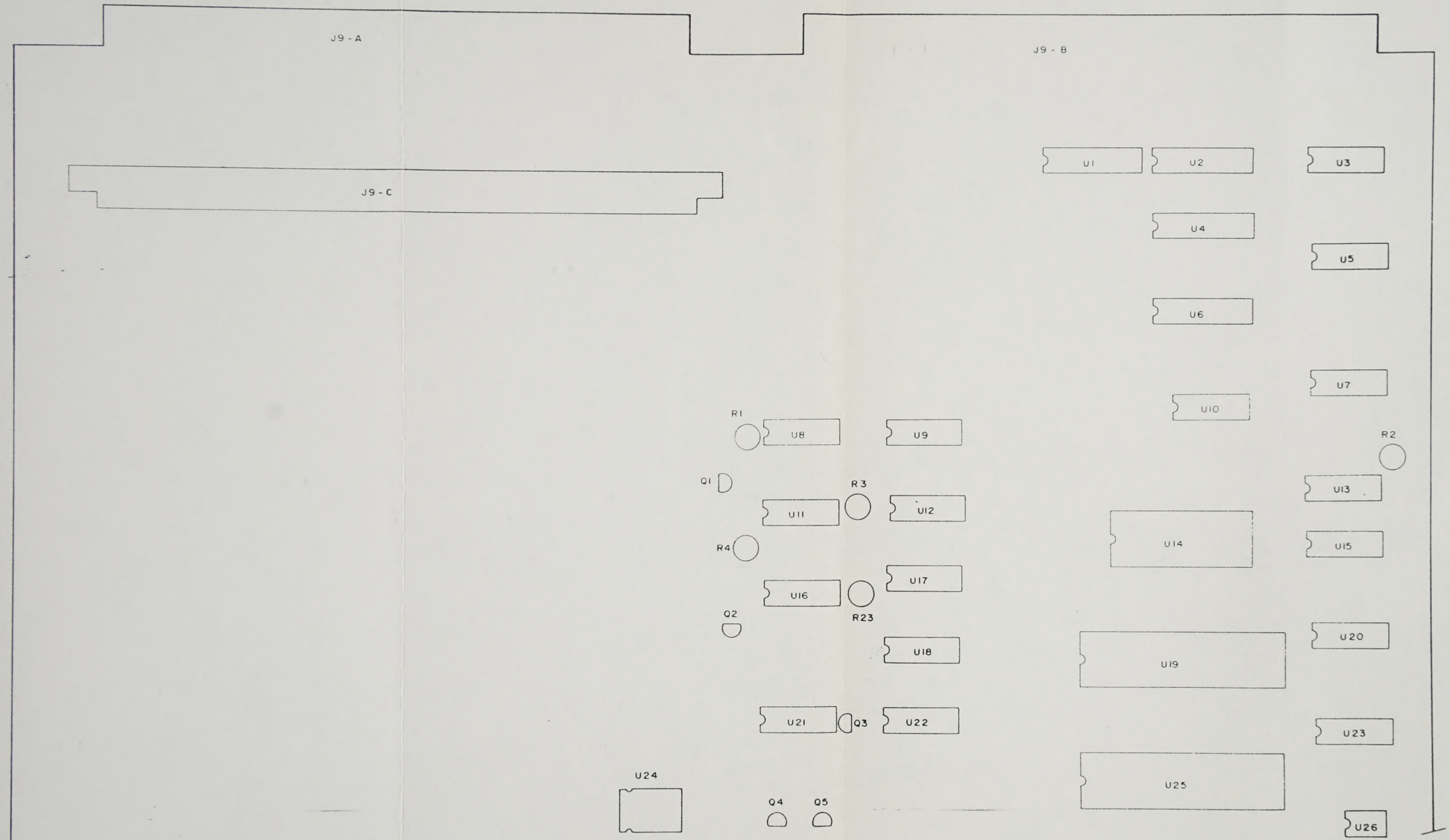

THIS SHEET

U1 - U26

R1 - R4, R23

Q1 - Q5

REVISION RECORD			
ISSUE	REV BY	APP BY	DATE
2M S-587 US			
2H	S-491	MS	12/3/85
CE	S-550	MS	12/3/85
2J	S-568	MS	12/3/85
2K	S-569	MS	12/3/85
2L	S-573	MS	12/3/85
CE	6-037	AGT	1/28/86

THESE DRAWINGS AND SPECIFICATIONS ARE THE PROPERTY OF ROSS VIDEO LIMITED AND SHALL NOT BE REPRODUCED OR COPIED OR USED AS THE BASIS FOR THE MANUFACTURE OR SALE OF APPARATUS WITHOUT PERMISSION

ROSS VIDEO LIMITED

TITLE: FRAME CONTROL PCB

RVS 210

SCALE — TO — : PCB LAYOUT

DRAWN BY: A. LAWTHER

APPROVED BY:

DATE: 3 MAY '85

DRAWING NO: 2210-42

ISSUE 2M SHEET 1 OF 2 SHEETS

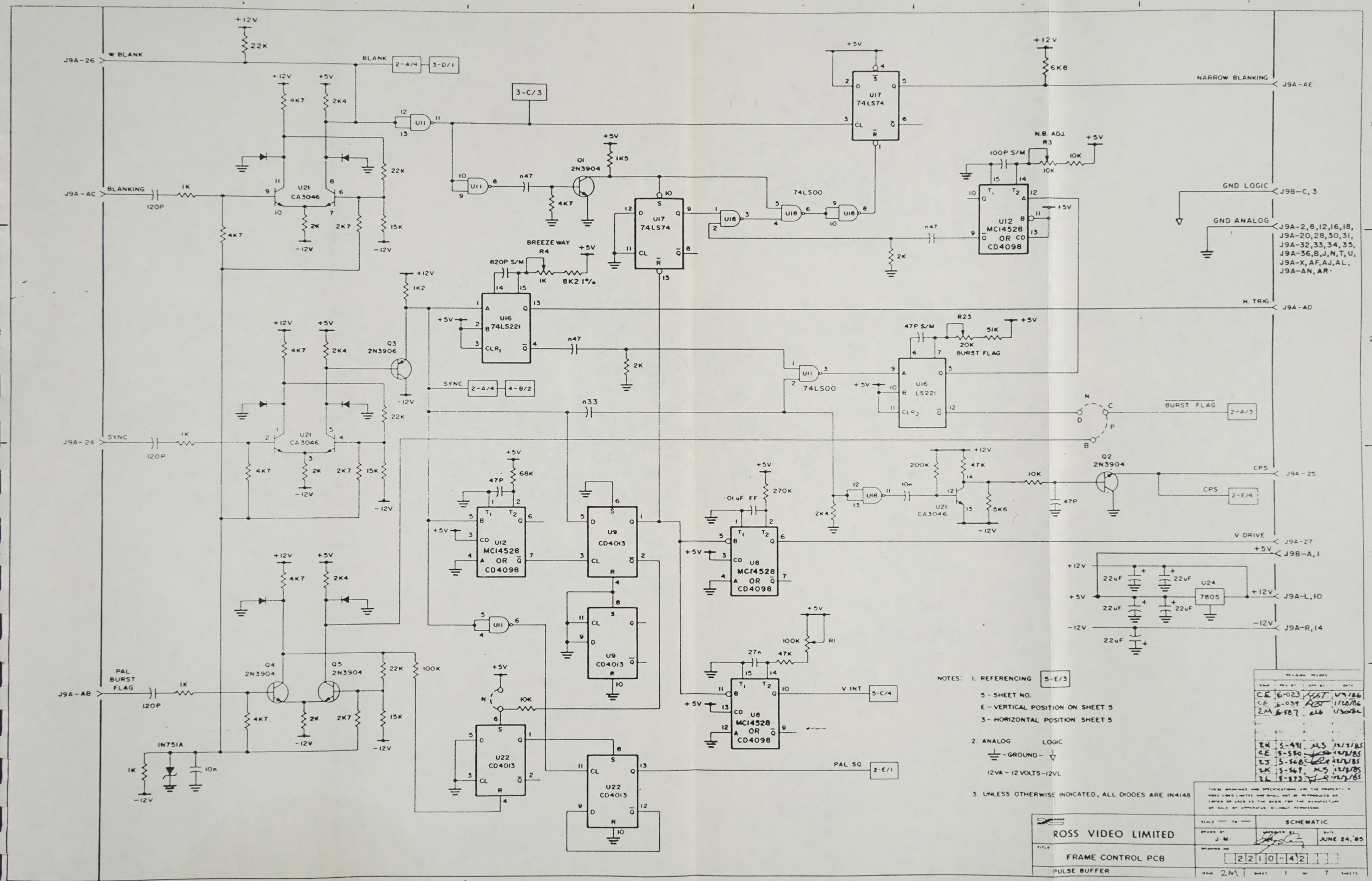

NOTES: 1. REFERENCING 5-E/3

5 - SHEET NO.

E - VERTICAL POSITION ON SHEET 5

3 - HORIZONTAL POSITION SHEET 5

2. ANALOG LOGIC

⏚ - GROUND - ▽

12VA - 12 VOLTS-12VL

3. UNLESS OTHERWISE INDICATED, ALL DIODES ARE IN4148

REVISION RECORD				
TRACE	REV. BY	APP. BY	DATE	
CE	6-023	KGT	1/7/86	
CE	6-039	KGT	1/20/86	
ZM	6-587	[illegible]	1/30/86	
ZH	5-491	MS	12/3/85	
CE	5-550	[illegible]	12/12/85	
ZJ	5-568	[illegible]	12/12/85	
ZK	5-569	MS	12/12/85	
ZL	5-573	[illegible]	12/12/85	

THESE DRAWINGS AND SPECIFICATIONS ARE THE PROPERTY OF ROSS VIDEO LIMITED AND SHALL NOT BE REPRODUCED OR COPIED OR USED AS THE BASIS FOR THE MANUFACTURE OR SALE OF APPARATUS WITHOUT PERMISSION

ROSS VIDEO LIMITED

TITLE: FRAME CONTROL PCB

PULSE BUFFER

SCALE — TO —

DRAWN BY: J.M.

APPROVED BY:

DATE: JUNE 24, '85

SCHEMATIC

DRAWING NO. 2210-42

SHEET 1 OF 7 SHEETS

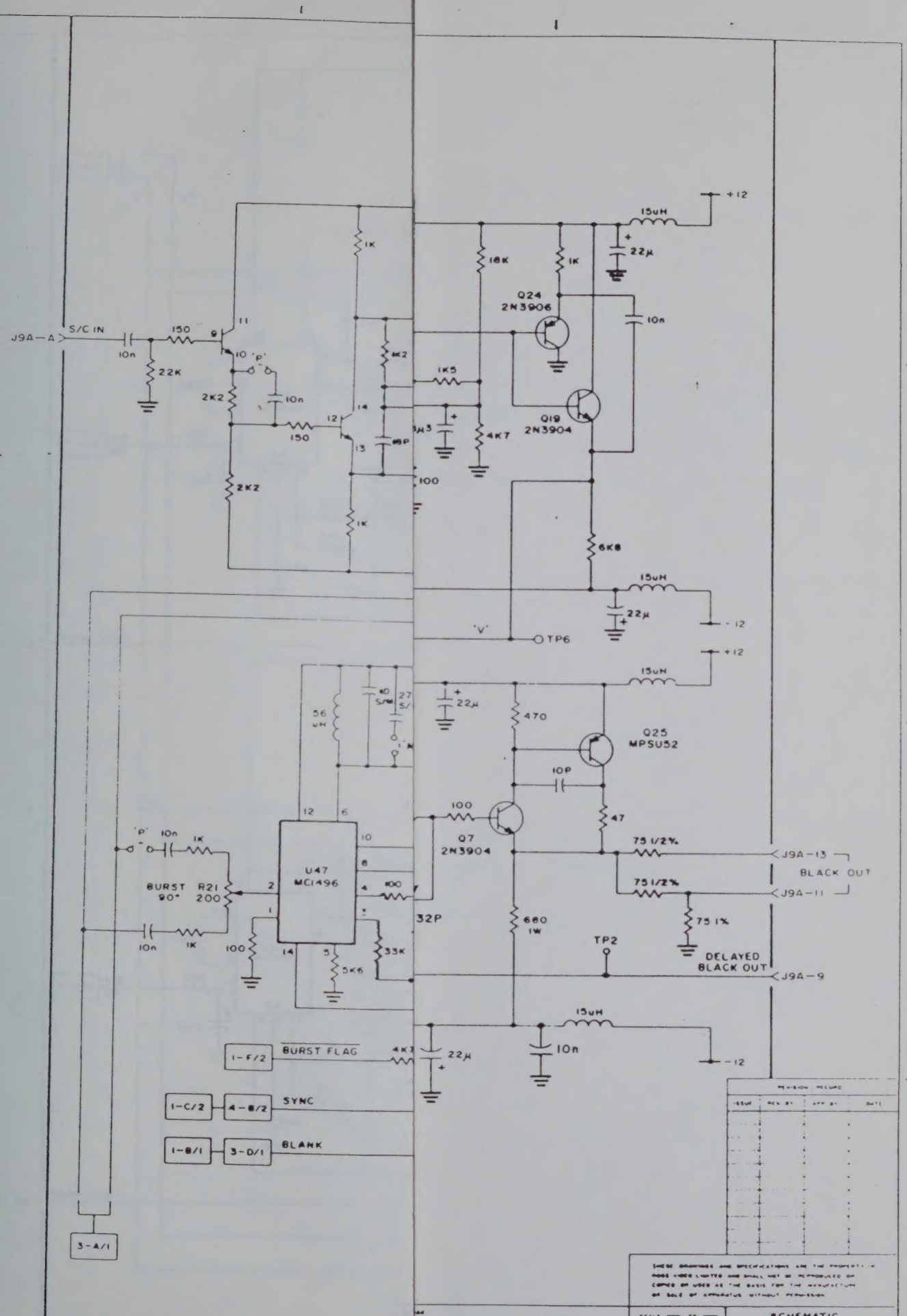
J9A-A
S/C IN
10n
150
22K
2K2
10n
150
2K2
1K
1K
4K2
1K5
4K7
100
Q24
2N3906
Q19
2N3904
18K
1K
15uH
22µ
10n
+12
6K8
15uH
22µ
-12
'V'
TP6
+12
15uH
22µ
470
Q25
MPSU52
10P
47
100
Q7
2N3904
680
1W
75 1/2%
75 1/2%
75 1%
J9A-13
BLACK OUT
J9A-11
TP2
DELAYED
BLACK OUT
J9A-9
15uH
10n
-12
56 uH
27 S/
U47
MC1496
BURST
90°
R21
200
10n
1K
100
5K6
33K
32P
BURST FLAG
4K7
22µ
1-F/2
1-C/2
4-B/2
SYNC
1-B/1
3-D/1
BLANK
3-A/1
OSS VIDEO LIMITED
FRAME CONTROL PCB
10-BLACK/BKGN'D/MATTE GENS
SCHEMATIC
MAB
JUNE 24, '85
2210-42
2M
2
7

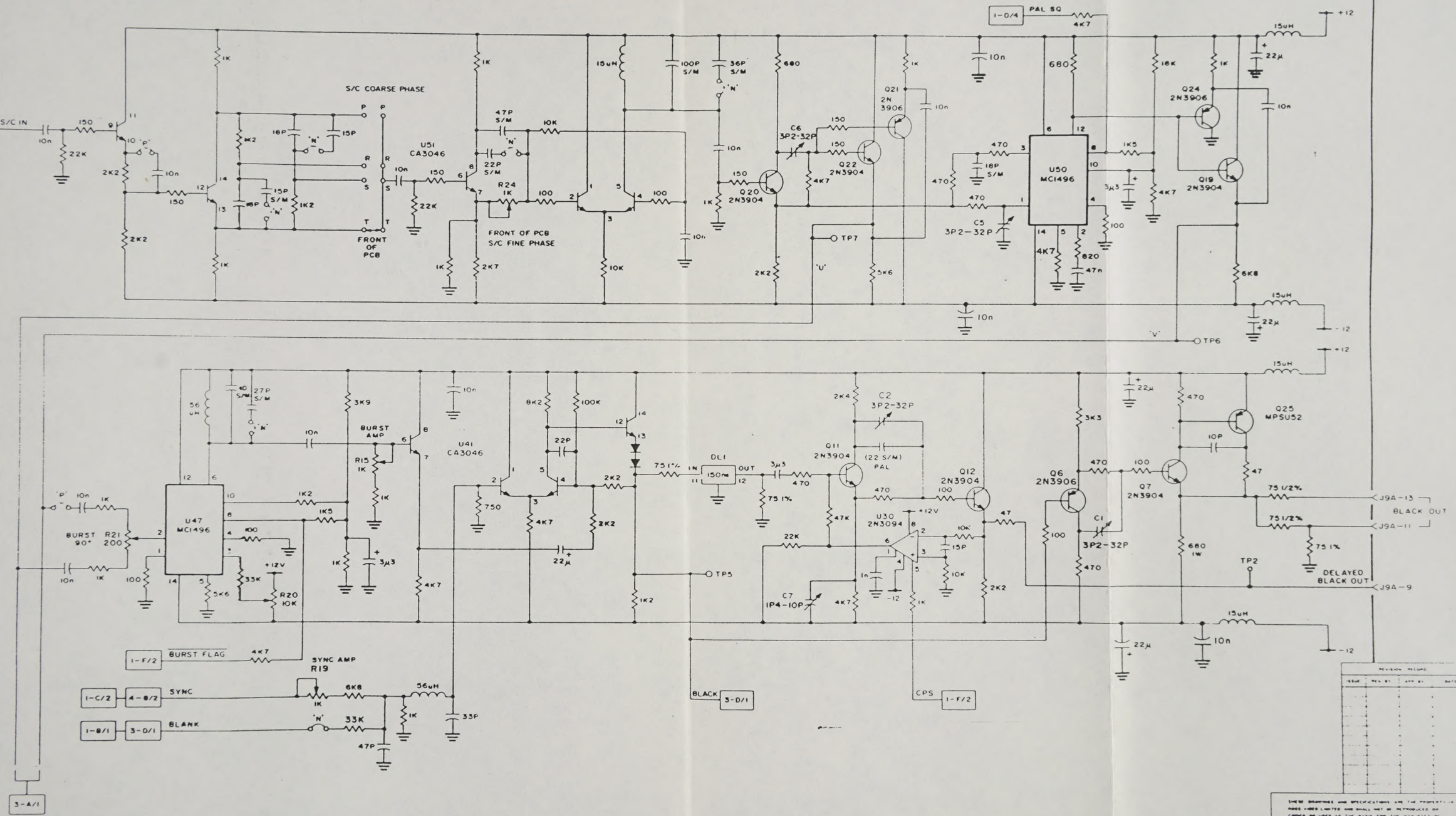

ROSS VIDEO LIMITED	SCHEMATIC
DRAWN BY: MAB	DATE: JUNE 24, '85
TITLE: FRAME CONTROL PCB	DRAWING NO: 22110-42
RVS 210-BLACK/BKGND/MATTE GENS	SHEET 2 OF 7

THESE DRAWINGS AND SPECIFICATIONS ARE THE PROPERTY OF ROSS VIDEO LIMITED AND SHALL NOT BE REPRODUCED OR COPIED OR USED AS THE BASIS FOR THE MANUFACTURE OR SALE OF APPARATUS WITHOUT PERMISSION.

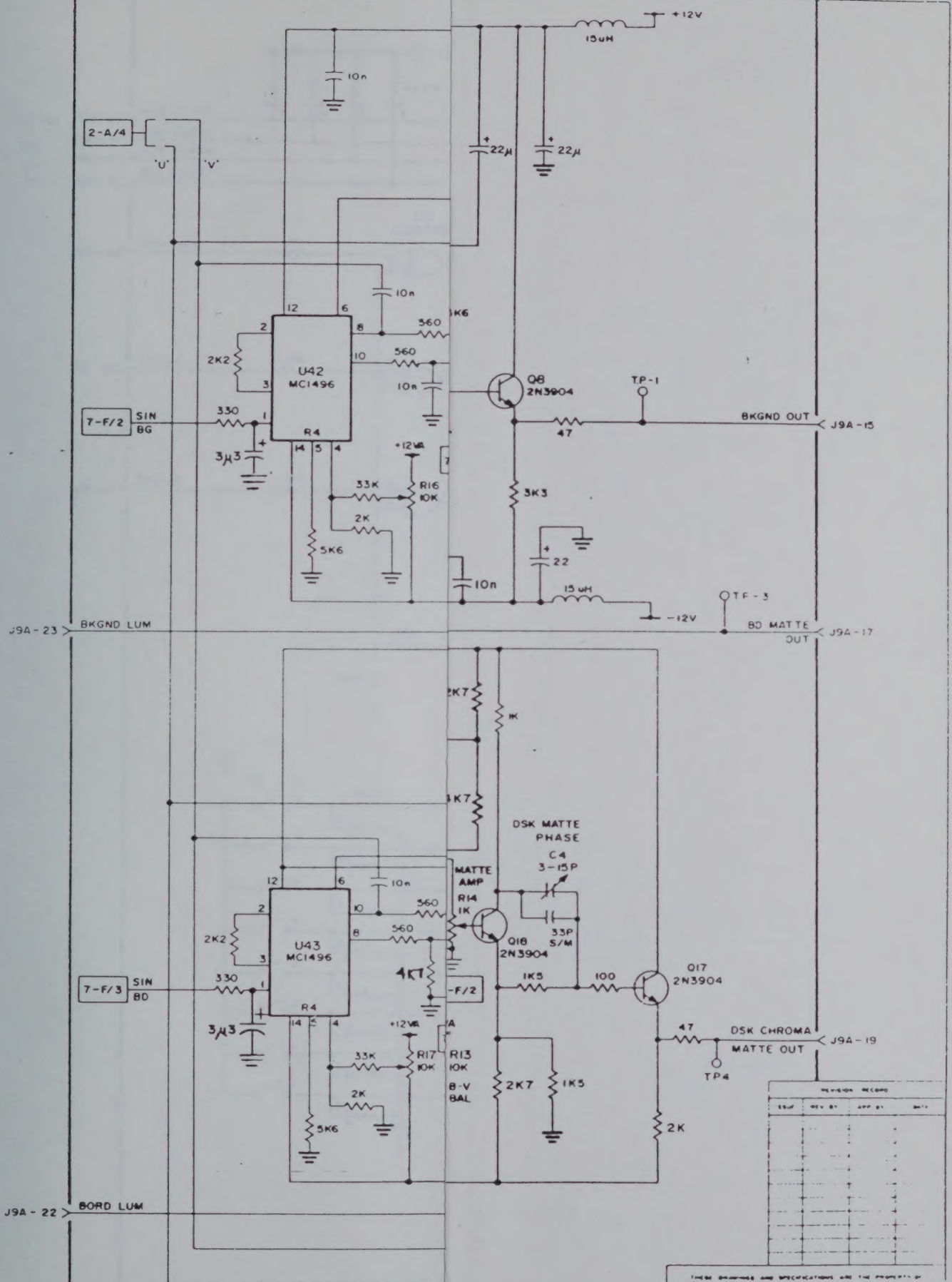

REVISION RECORD			
ISSUE	REV. BY	APP. BY	DATE

THESE DRAWINGS AND SPECIFICATIONS ARE THE PROPERTY OF ROSS VIDEO LIMITED AND SHALL NOT BE REPRODUCED OR COPIED OR USED AS THE BASIS FOR THE MANUFACTURE OR SALE OF APPARATUS WITHOUT PERMISSION

OSS VIDEO LIMITED

E CONTROL PCB

0-BLACK/BKGN'D./MATTE GENS.

SCALE ___ TO ___	SCHEMATIC	
DRAWN BY A. TATTON	APPROVED BY	DATE 20 JUN. 85
DRAWING NO 2210-42		
REV 2M	SHEET 3 OF 7 SHEETS	

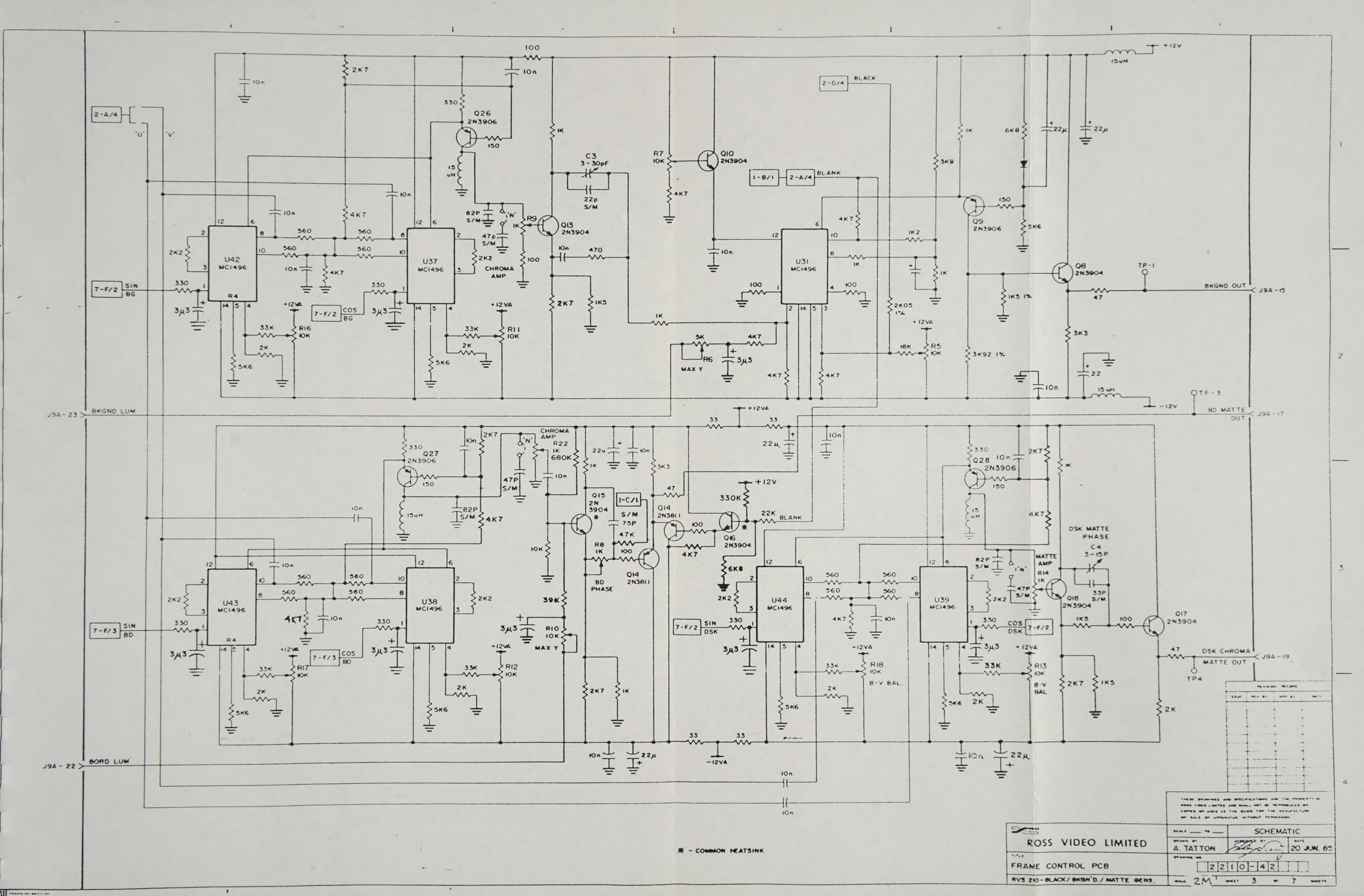
2-A/4
'U'
'V'
7-F/2
SIN BG
7-F/3
SIN BD
7-F/2
COS BG
7-F/3
COS BD
7-F/2
SIN DSK
7-F/2
COS DSK
U42 MC1496
U37 MC1496
U43 MC1496
U38 MC1496
U31 MC1496
U44 MC1496
U39 MC1496
Q26 2N3906
Q27 2N3906
Q28 2N3906
Q9 2N3906
Q10 2N3904
Q13 2N3904
Q15 2N3904
Q16 2N3904
Q14 2N3811
Q8 2N3904
Q18 2N3904
Q17 2N3904
CHROMA AMP
MATTE AMP
BD PHASE
DSK MATTE PHASE
MAX Y
8-V BAL.
BLACK
BLANK
1-B/1
2-A/4
1-C/1
BKGND OUT
J9A-15
TP-1
BD MATTE OUT
J9A-17
TP-3
DSK CHROMA MATTE OUT
J9A-19
TP4
J9A-23
BKGND LUM
J9A-22
BORD LUM
+12V
-12V
+12VA
-12VA
* - COMMON HEATSINK
ROSS VIDEO LIMITED
FRAME CONTROL PCB
RV3 210-BLACK/BKGN'D./MATTE GENS.
SCHEMATIC
A. TATTON
20 JUN. 85
22110-42
2M
SHEET 3 OF 7 SHEETS

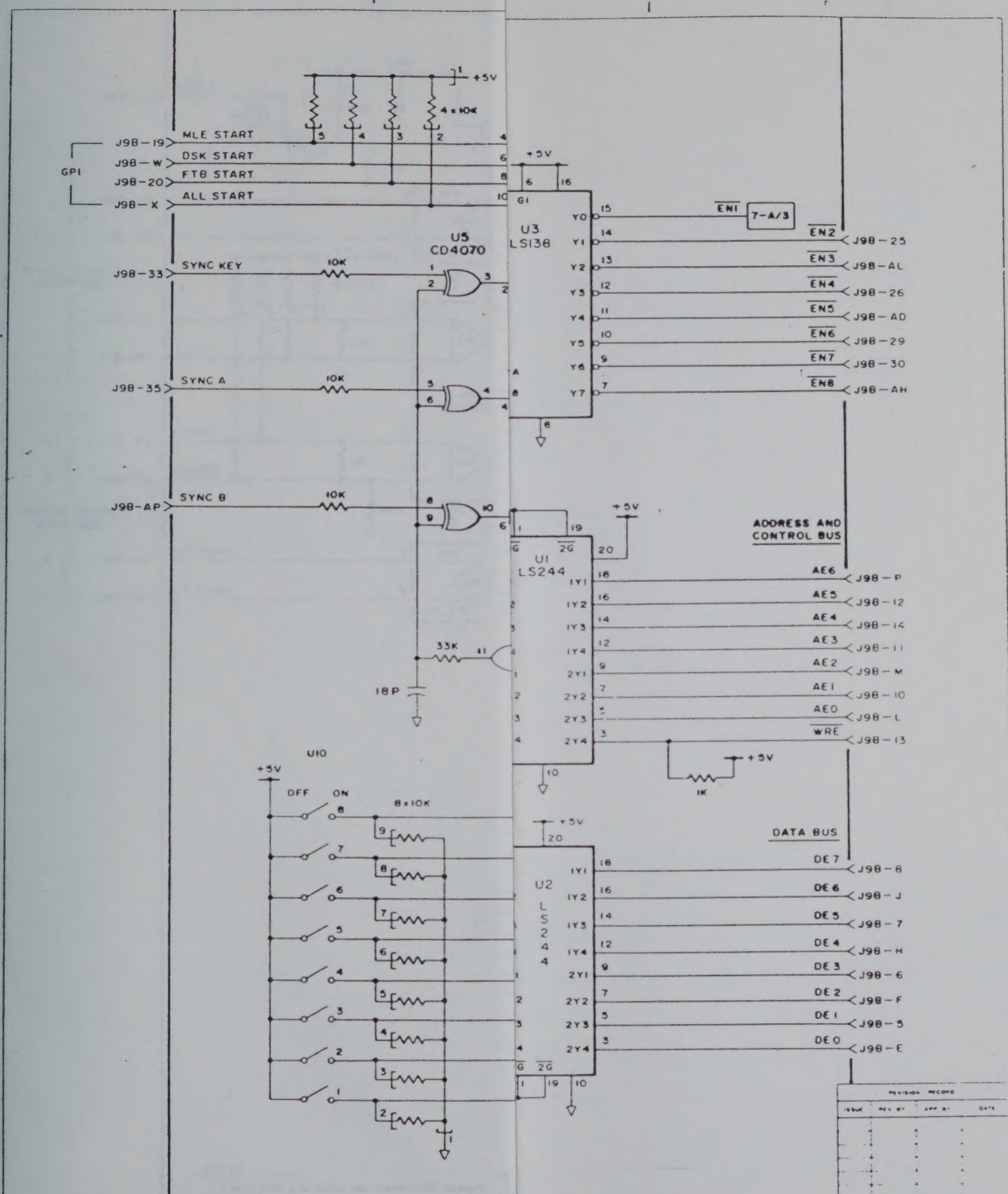
+5V
4 x 10K
GPI
J98-19
MLE START
J98-W
DSK START
J98-20
FTB START
J98-X
ALL START
U3
LS138
EN1
7-A/3
EN2
J98-25
EN3
J98-AL
EN4
J98-26
EN5
J98-AD
EN6
J98-29
EN7
J98-30
EN8
J98-AH
U5
CD4070
J98-33
SYNC KEY
10K
J98-35
SYNC A
J98-AP
SYNC B
33K
18P
U1
LS244
ADDRESS AND
CONTROL BUS
AE6
J98-P
AE5
J98-12
AE4
J98-14
AE3
J98-11
AE2
J98-M
AE1
J98-10
AE0
J98-L
WRE
J98-13
1K
U10
OFF
ON
8 x 10K
U2
LS244
DATA BUS
DE7
J98-8
DE6
J98-J
DE5
J98-7
DE4
J98-H
DE3
J98-6
DE2
J98-F
DE1
J98-5
DE0
J98-E
REVISION RECORD
ISSUE
REV BY
APP BY
DATE
THESE DRAWINGS AND SPECIFICATIONS ARE THE PROPERTY OF ROSS VIDEO LIMITED AND SHALL NOT BE REPRODUCED OR COPIED OR USED AS THE BASIS FOR THE MANUFACTURE OR SALE OF APPARATUS WITHOUT PERMISSION
ROSS VIDEO LIMITED
FRAME CONTROL PCB
VO FRAME
SCHEMATIC
DRAWN BY
MAB
DATE
JUNE 7, 1985
2210-42
ISSUE 2M
SHEET 4 OF 7 SHEETS

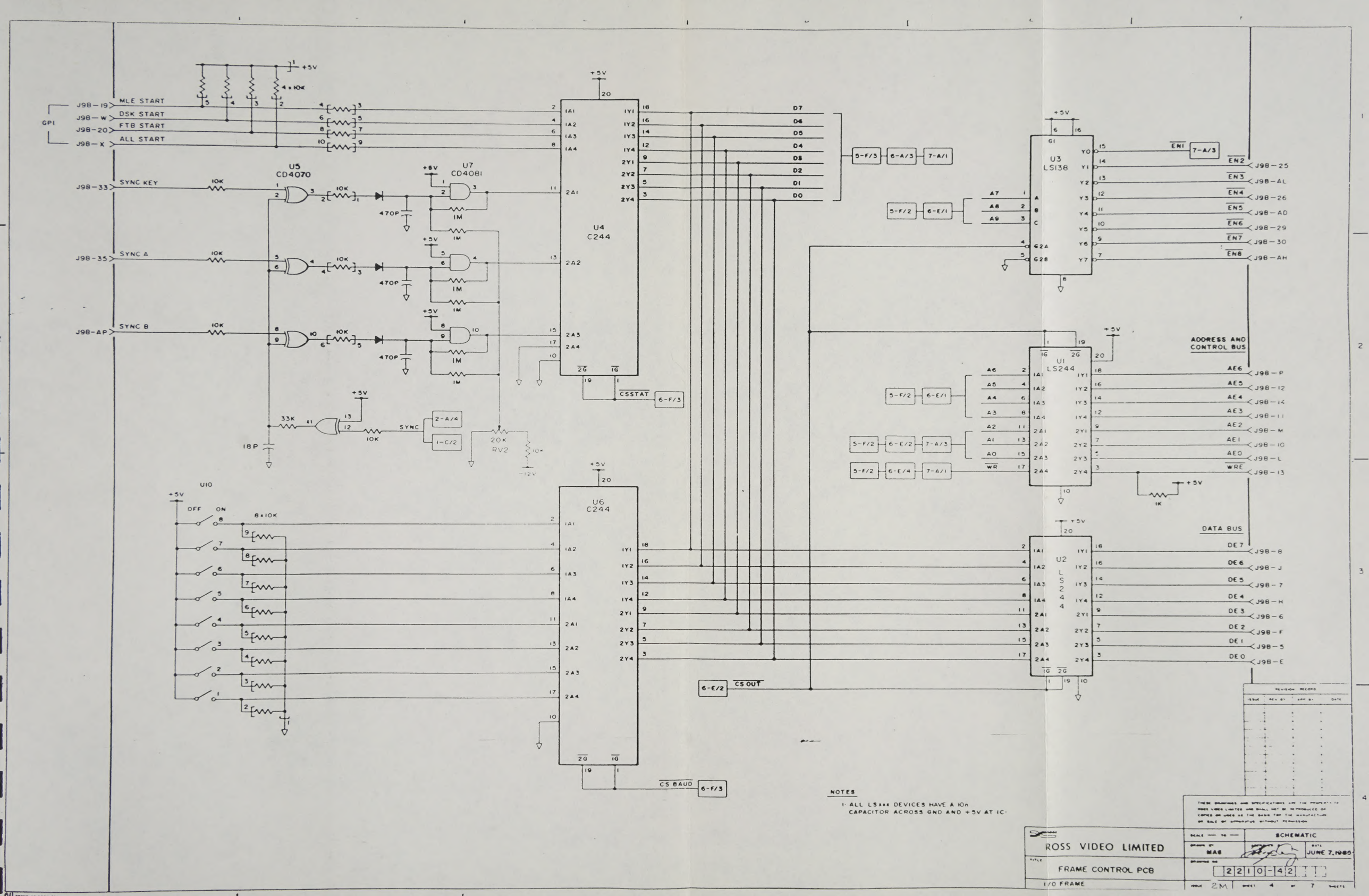
GPI
J9B-19
MLE START
J9B-W
DSK START
J9B-20
FTB START
J9B-X
ALL START
4 x 10K
+5V
U5
CD4070
U7
CD4081
J9B-33
SYNC KEY
J9B-35
SYNC A
J9B-AP
SYNC B
10K
470P
1M
33K
18P
SYNC
2-A/4
1-C/2
20K
RV2
-12V
U4
C244
U6
C244
U10
OFF
ON
8 x 10K
CSSTAT
6-F/3
CS BAUD
CS OUT
6-E/2
D7
D6
D5
D4
D3
D2
D1
D0
5-F/3
6-A/3
7-A/1
5-F/2
6-E/1
U3
LS138
EN1
7-A/3
EN2
EN3
EN4
EN5
EN6
EN7
EN8
J9B-25
J9B-AL
J9B-26
J9B-AD
J9B-29
J9B-30
J9B-AH
U1
LS244
5-F/2
6-E/1
5-F/2
6-E/2
7-A/3
5-F/2
6-E/4
7-A/1
ADDRESS AND CONTROL BUS
AE6
AE5
AE4
AE3
AE2
AE1
AE0
WRE
J9B-P
J9B-12
J9B-14
J9B-11
J9B-M
J9B-10
J9B-L
J9B-13
1K
U2
LS244
DATA BUS
DE7
DE6
DE5
DE4
DE3
DE2
DE1
DE0
J9B-8
J9B-J
J9B-7
J9B-H
J9B-6
J9B-F
J9B-5
J9B-E
NOTES
1. ALL LSxxx DEVICES HAVE A 10n CAPACITOR ACROSS GND AND +5V AT IC.
REVISION RECORD
ROSS VIDEO LIMITED
FRAME CONTROL PCB
I/O FRAME
SCHEMATIC
MAG
JUNE 7, 1985
2210-42
2M
4 OF 7 SHEETS

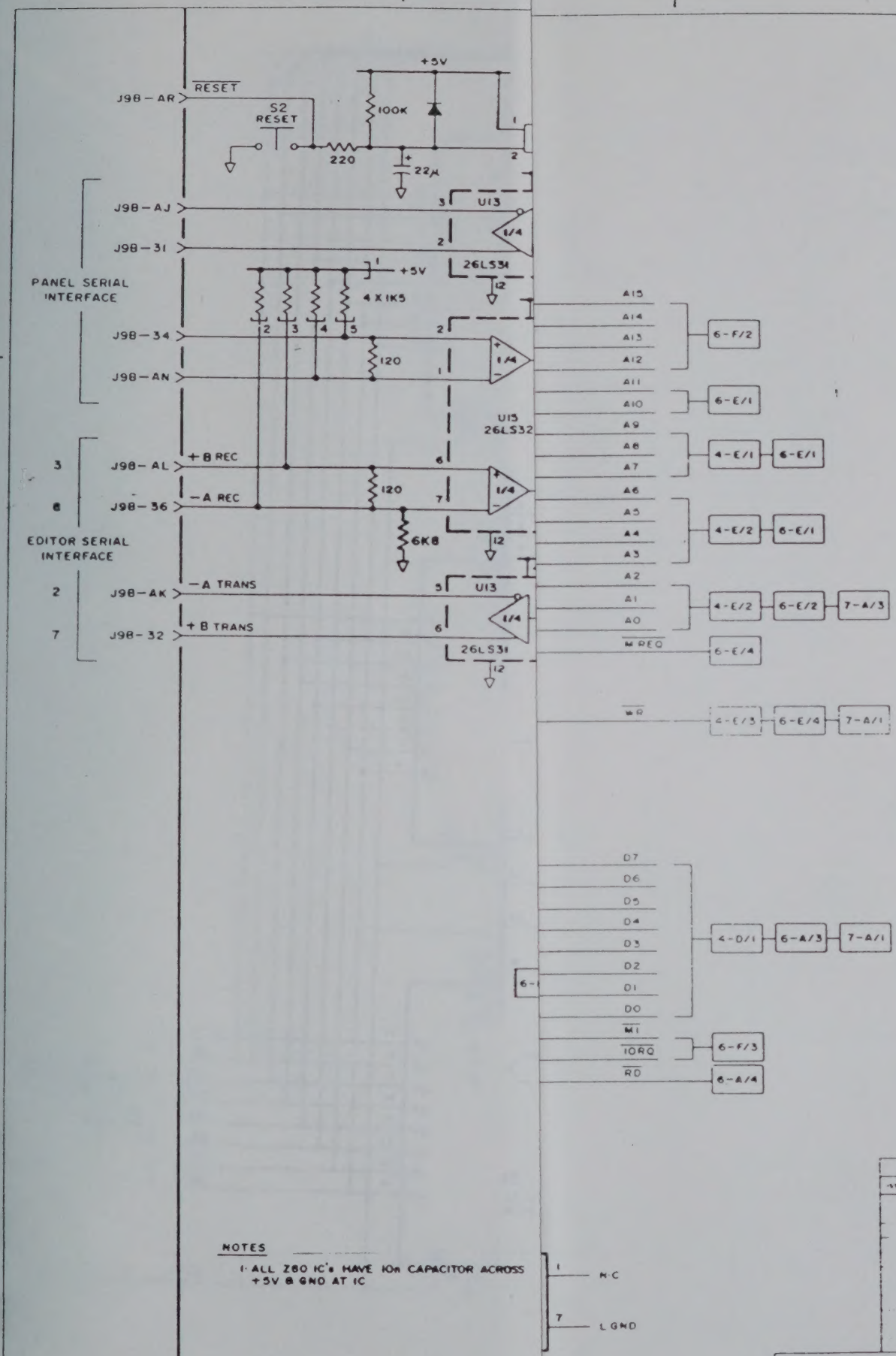

REVISION RECORD			
ISSUE	REV BY	APP BY	DATE

THESE DRAWINGS AND SPECIFICATIONS ARE THE PROPERTY OF ROSS VIDEO LIMITED AND SHALL NOT BE REPRODUCED OR COPIED OR USED AS THE BASIS FOR THE MANUFACTURE OR SALE OF APPARATUS WITHOUT PERMISSION

ROSS VIDEO LIMITED

FRAME CONTROL PCB

FRAME CPU

SCALE — TO —

SCHEMATIC

DRAWN BY MAS

APPROVED BY

DATE JUNE 14, '85

DRAWING NO 2210-42

ISSUE 2M SHEET 5 OF 7 SHEETS

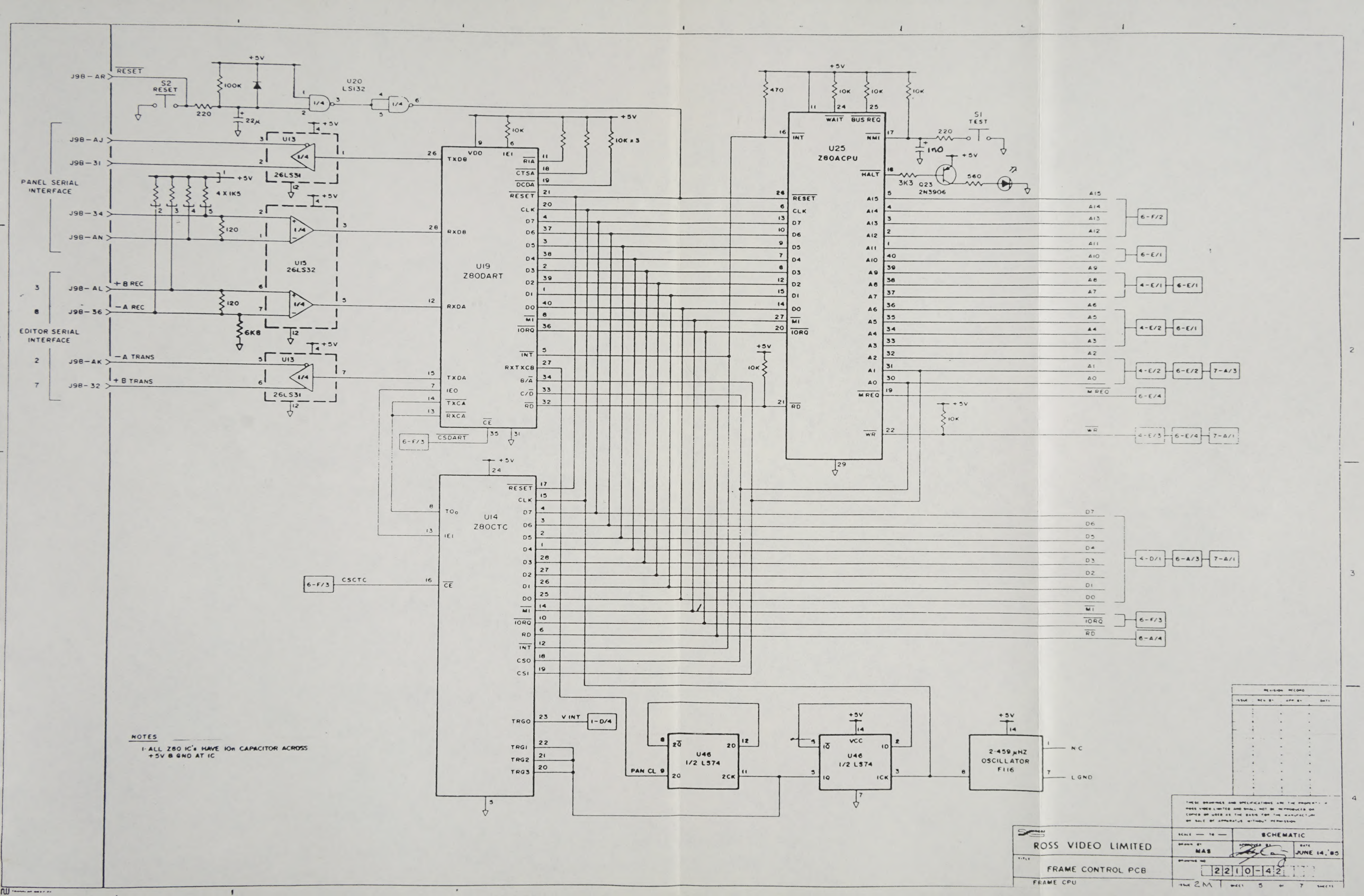
J9B-AR
RESET
S2 RESET
+5V
100K
220
22µ
U20 LS132
1/4
J9B-AJ
J9B-31
U13
26LS31
PANEL SERIAL INTERFACE
4 X 1K5
J9B-34
J9B-AN
120
U13 26LS32
J9B-AL
+B REC
J9B-36
-A REC
6K8
EDITOR SERIAL INTERFACE
J9B-AK
-A TRANS
J9B-32
+B TRANS
U19 Z80DART
VDD
IEI
TXDB
RXDB
RXDA
TXDA
IEO
TXCA
RXCA
CE
RIA
CTSA
DCDA
RESET
CLK
D7
D6
D5
D4
D3
D2
D1
D0
M1
IORQ
INT
RXTXCB
B/A
C/D
RD
10K
10K x 3
6-F/3
CSDART
U14 Z80CTC
TO0
IEI
CE
TRG0
TRG1
TRG2
TRG3
CSCTC
V INT
1-D/4
U25 Z80ACPU
WAIT
BUS REQ
NMI
HALT
MREQ
WR
470
S1 TEST
1n0
3K3
Q23 2N3906
560
A15
A14
A13
A12
A11
A10
A9
A8
A7
A6
A5
A4
A3
A2
A1
A0
6-F/2
6-E/1
4-E/1
4-E/2
7-A/3
6-E/4
4-E/3
7-A/1
4-D/1
6-A/3
6-A/4
PAN CL 9
U46 1/2 LS74
VCC
2·459 MHZ OSCILLATOR F116
N.C
L GND
NOTES
1· ALL Z80 IC'S HAVE 10n CAPACITOR ACROSS +5V & GND AT IC
REVISION RECORD
ISSUE
REV. BY
APP. BY
DATE
THESE DRAWINGS AND SPECIFICATIONS ARE THE PROPERTY OF ROSS VIDEO LIMITED AND SHALL NOT BE REPRODUCED OR COPIED OR USED AS THE BASIS FOR THE MANUFACTURE OR SALE OF APPARATUS WITHOUT PERMISSION
ROSS VIDEO LIMITED
TITLE
FRAME CONTROL PCB
FRAME CPU
SCALE — TO —
SCHEMATIC
DRAWN BY
MAS
APPROVED BY
DATE
JUNE 14.'85
DRAWING NO
2210-42
ISSUE 2M
SHEET 5 OF 7 SHEETS

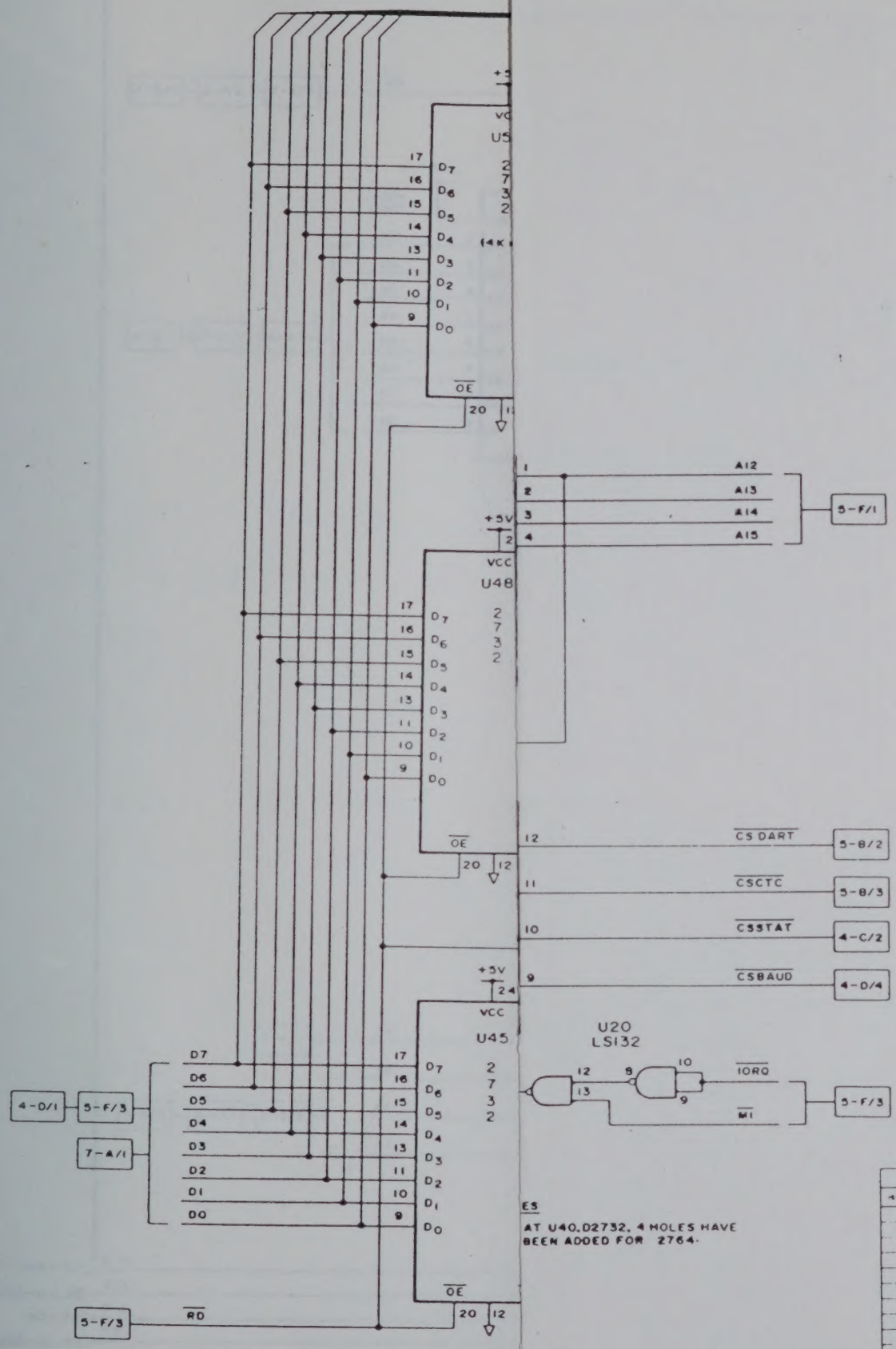

REVISION RECORD

ISSUE	REV BY	APP BY	DATE

THESE DRAWINGS AND SPECIFICATIONS ARE THE PROPERTY OF ROSS VIDEO LIMITED AND SHALL NOT BE REPRODUCED OR COPIED OR USED AS THE BASIS FOR THE MANUFACTURE OR SALE OF APPARATUS WITHOUT PERMISSION

ROSS VIDEO LIMITED

FRAME CONTROL PCB

FRAME MEMORY & DECODING

SCALE — TO —

SCHEMATIC

DRAWN BY: MAS

DATE: JUNE 18, 1983

DRAWING NO: 2210-42

ISSUE 2M

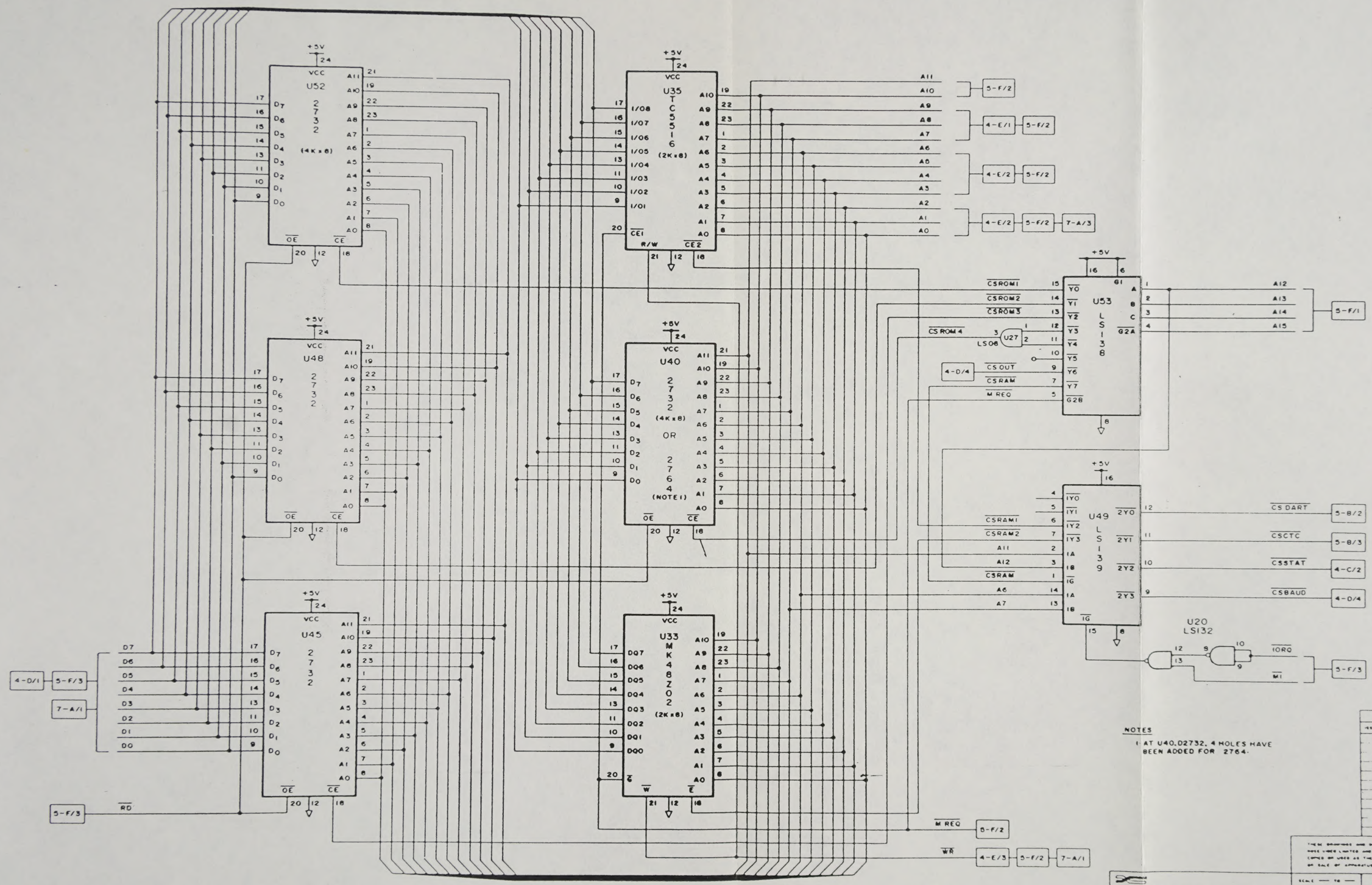

NOTES

1. AT U40, 2732, 4 HOLES HAVE BEEN ADDED FOR 2764.

REVISION RECORD			
ITEM	REV BY	APP BY	DATE

THESE DRAWINGS AND SPECIFICATIONS ARE THE PROPERTY OF ROSS VIDEO LIMITED AND SHALL NOT BE REPRODUCED OR COPIED OR USED AS THE BASIS FOR THE MANUFACTURE OR SALE OF APPARATUS WITHOUT PERMISSION

ROSS VIDEO LIMITED

TITLE: FRAME CONTROL PCB

FRAME MEMORY & DECODING

SCALE — TO —

SCHEMATIC

DRAWN BY: MAB

DATE: JUNE 18, 1985

DRAWING NO: 2210-42

ITEM 2M

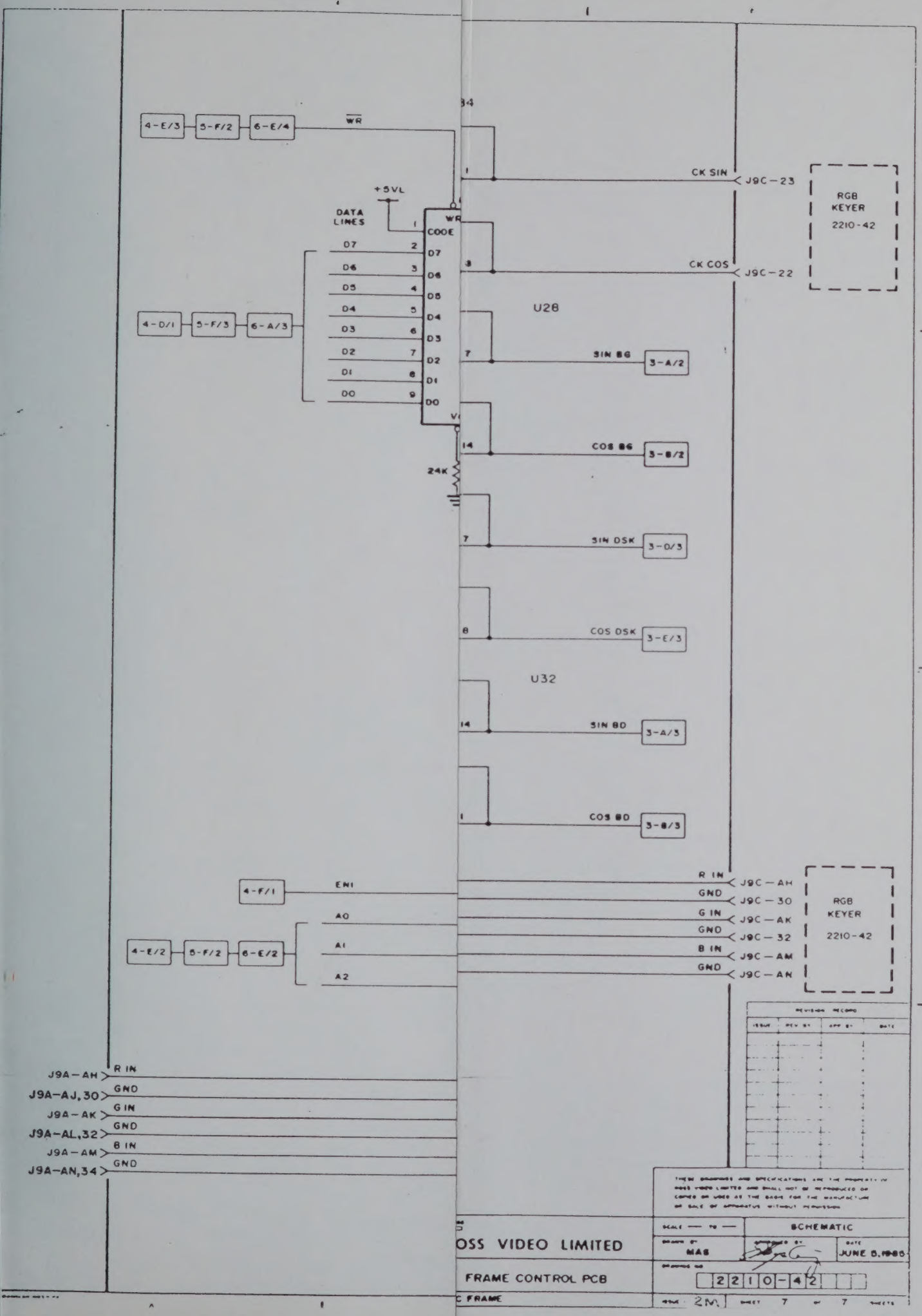
4-E/3
5-F/2
6-E/4
WR
+5VL
DATA LINES
D7
D6
D5
D4
D3
D2
D1
D0
4-D/1
5-F/3
6-A/3
CODE
U28
U32
24K
CK SIN
J9C-23
CK COS
J9C-22
RGB KEYER 2210-42
SIN BG
3-A/2
COS BG
3-B/2
SIN DSK
3-D/3
COS DSK
3-E/3
SIN BD
3-A/3
COS BD
3-B/3
4-F/1
ENI
A0
A1
A2
4-E/2
5-F/2
6-E/2
R IN
GND
G IN
B IN
J9C-AH
J9C-30
J9C-AK
J9C-32
J9C-AM
J9C-AN
J9A-AH
J9A-AJ,30
J9A-AK
J9A-AL,32
J9A-AM
J9A-AN,34
REVISION RECORD
ISSUE
REV BY
APP BY
DATE
SCHEMATIC
MAS
JUNE 8, 1986
2210-42
FRAME CONTROL PCB
2M
SHEET 7 OF 7 SHEETS

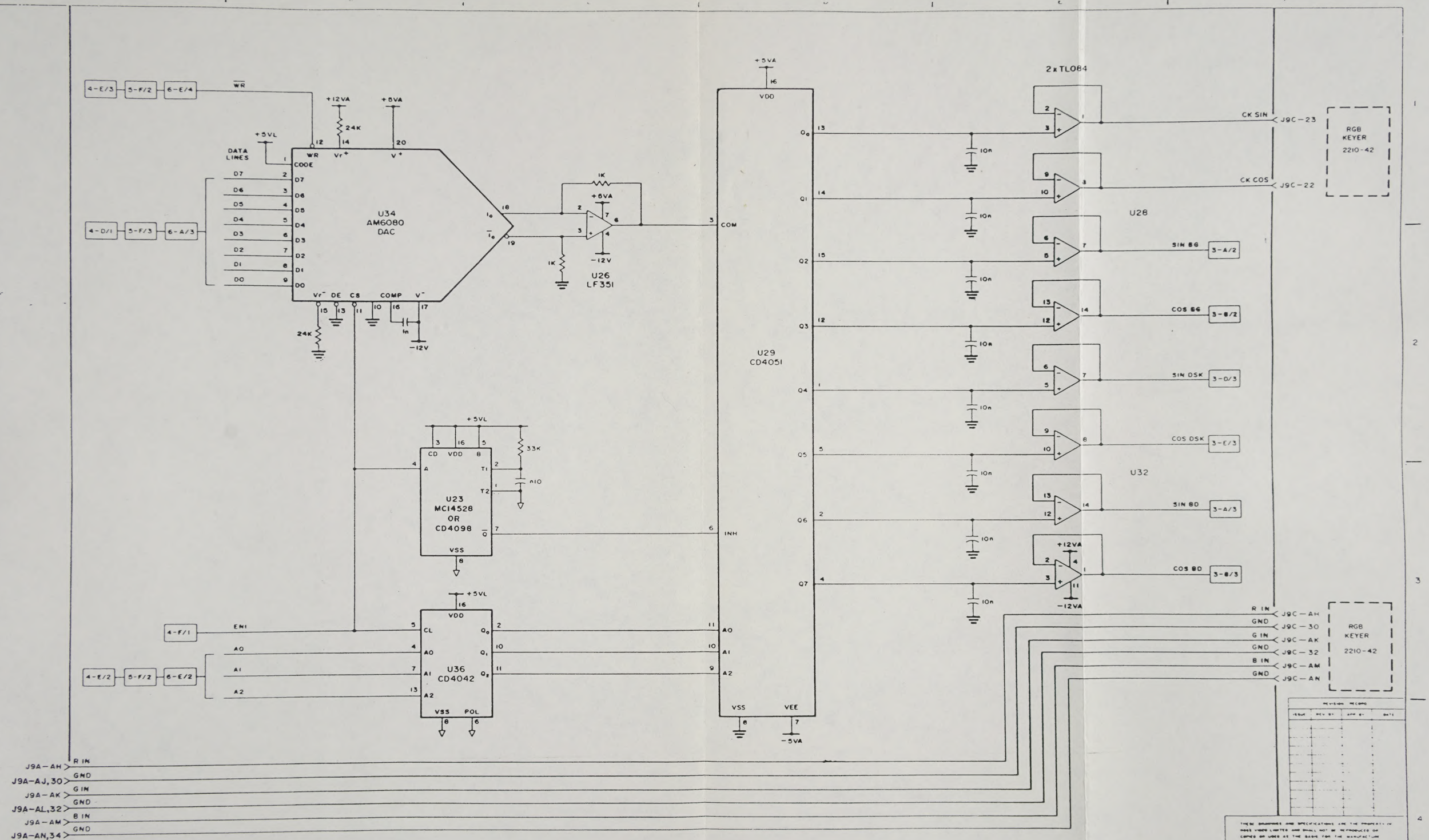
4-E/3
5-F/2
6-E/4
WR
+12VA
+5VA
24K
+5VL
DATA LINES
CODE
D7
D6
D5
D4
D3
D2
D1
D0
4-D/1
5-F/3
6-A/3
U34
AM6080
DAC
Vr+
V+
Vr-
DE
CS
COMP
V-
1n
-12V
1K
U26
LF351
+5VA
VDD
COM
U29
CD4051
Q0
Q1
Q2
Q3
Q4
Q5
Q6
Q7
10n
2xTL084
U28
U32
CK SIN
CK COS
J9C-23
J9C-22
RGB KEYER 2210-42
SIN BG
COS BG
SIN DSK
COS DSK
SIN BD
COS BD
3-A/2
3-B/2
3-D/3
3-E/3
3-A/3
3-B/3
+12VA
-12VA
33K
n10
U23
MC14528
OR
CD4098
CD
VDD
VSS
INH
4-F/1
EN1
A0
A1
A2
4-E/2
5-F/2
6-E/2
U36
CD4042
CL
POL
VEE
-5VA
R IN
GND
G IN
B IN
J9C-AH
J9C-30
J9C-AK
J9C-32
J9C-AM
J9C-AN
J9A-AH
J9A-AJ,30
J9A-AK
J9A-AL,32
J9A-AM
J9A-AN,34
REVISION RECORD
ROSS VIDEO LIMITED
SCHEMATIC
MAB
JUNE 5,1985
FRAME CONTROL PCB
DAC FRAME
2210-42
2M
SHEET 7 OF 7

REVISION RECORD

ISSUE	REV BY	APP BY	DATE
1A	85-287	JE	9 JULY 85
1B	5-368	RS	16/9/85
1C	5-456	[illegible]	28-10-85
1D	5-469	[illegible]	28-10-85
1E	5-567	[illegible]	4-12-85

THESE DRAWINGS AND SPECIFICATIONS ARE THE PROPERTY OF ROSS VIDEO LIMITED AND SHALL NOT BE REPRODUCED OR COPIED OR USED AS THE BASIS FOR THE MANUFACTURE OR SALE OF APPARATUS WITHOUT PERMISSION

S VIDEO LIMITED

BORDER PCB

SCALE — TO — PCB LAYOUT

DRAWN BY A.LAWTHER

APPROVED BY [illegible]

DATE 9 MAY '85

DRAWING NO 2210-43

ISSUE 1E SHEET 1 OF 1 SHEETS

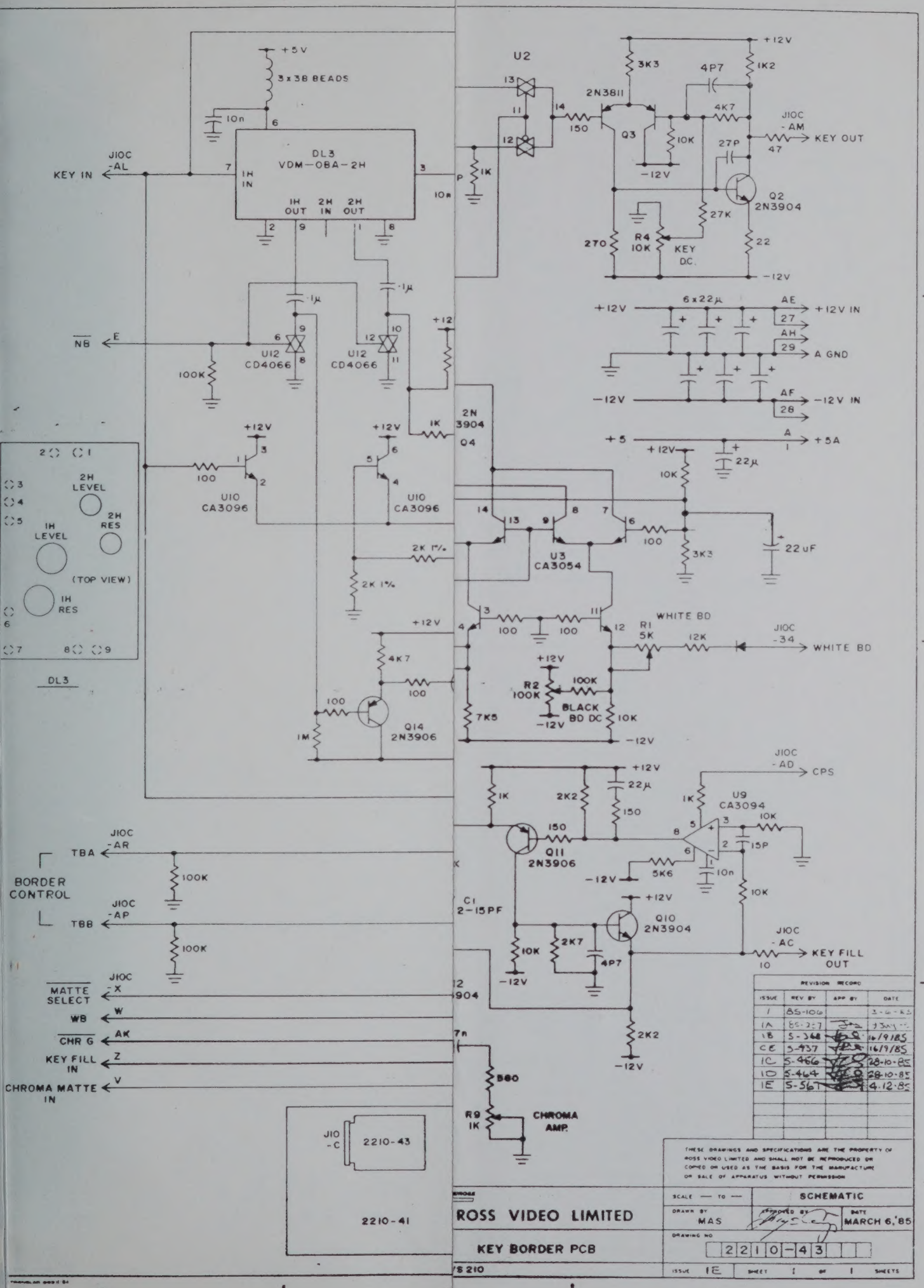
+5V
3x38 BEADS
10n
DL3
VDM-0BA-2H
1H IN
1H OUT
2H IN
2H OUT
J10C -AL
KEY IN
NB
E
U12 CD4066
100K
U10 CA3096
2H LEVEL
2H RES
1H LEVEL
(TOP VIEW)
1H RES
DL3
U2
2N3811
Q3
3K3
4P7
1K2
4K7
J10C -AM
KEY OUT
27P
Q2 2N3904
27K
R4 10K
KEY DC.
270
22
+12V
-12V
6x22µ
AE
+12V IN
AH
A GND
AF
-12V IN
+5
A
+5A
22µ
10K
22uF
2N 3904 Q4
U3 CA3054
2K 1%
WHITE BD
R1 5K
12K
J10C -34
WHITE BD
R2 100K
100K
BLACK BD DC
7K5
Q14 2N3906
1M
J10C -AD
CPS
U9 CA3094
15P
5K6
Q11 2N3906
C1 2-15PF
Q10 2N3904
2K7
J10C -AC
KEY FILL OUT
2K2
BORDER CONTROL
J10C -AR
TBA
J10C -AP
TBB
MATTE SELECT
J10C -X
WB
CHR G
KEY FILL IN
CHROMA MATTE IN
560
R9 1K
CHROMA AMP.
J10 -C
2210-43
2210-41
REVISION RECORD
ISSUE | REV BY | APP BY | DATE
1 | 85-106 | | 3-6-85
1A | 85-227 | | 13 MAY
1B | 5-368 | | 16/9/85
1C | 5-437 | | 16/9/85
1C | 5-466 | | 28-10-85
1D | 5-464 | | 28-10-85
1E | 5-567 | | 4.12.85
THESE DRAWINGS AND SPECIFICATIONS ARE THE PROPERTY OF ROSS VIDEO LIMITED AND SHALL NOT BE REPRODUCED OR COPIED OR USED AS THE BASIS FOR THE MANUFACTURE OR SALE OF APPARATUS WITHOUT PERMISSION
ROSS VIDEO LIMITED
KEY BORDER PCB
SCALE — TO —
SCHEMATIC
DRAWN BY MAS
APPROVED BY
DATE MARCH 6, '85
DRAWING NO 22100-43
ISSUE 1E
SHEET 1 OF 1 SHEETS

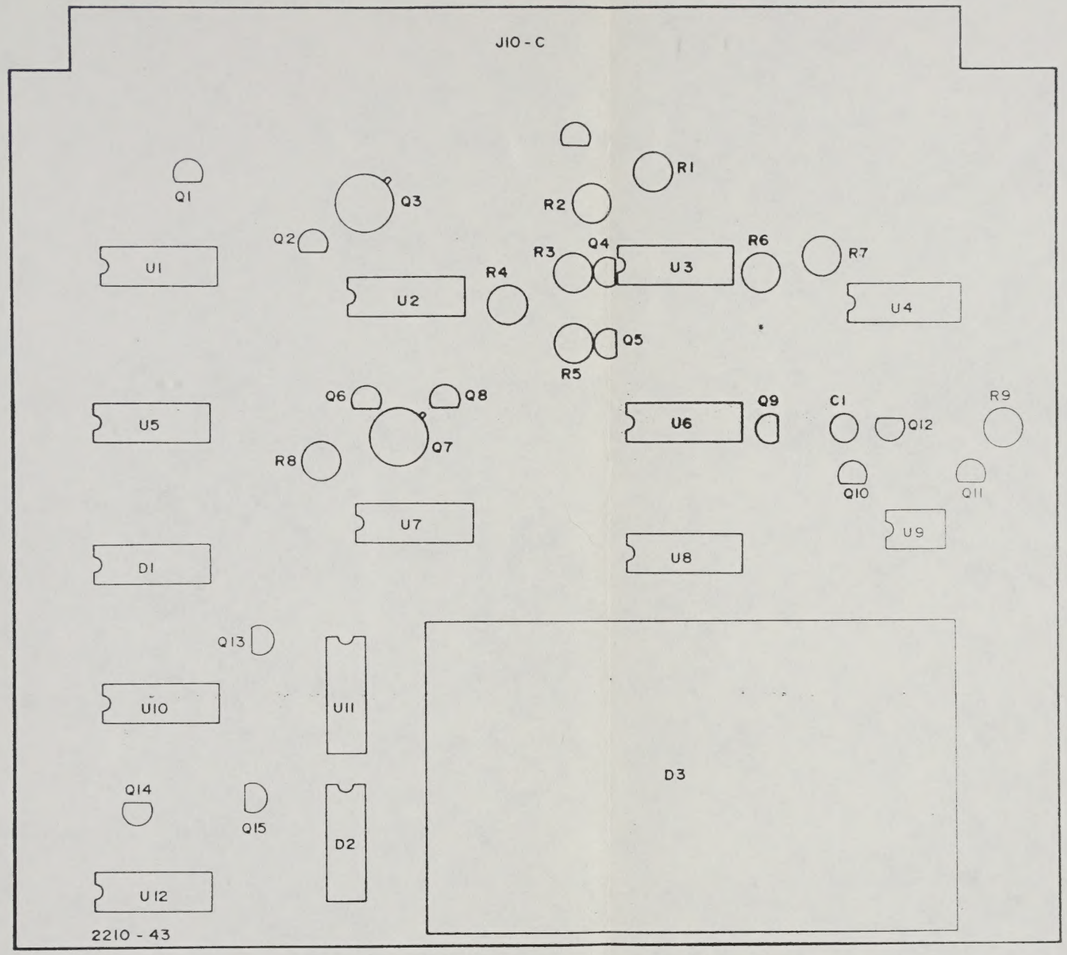

REVISION RECORD			
ISSUE	REV BY	APP BY	DATE
1A	85-287	JC	9 JULY 85
1B	5-368	RS	16/9/85
1C	5-456	[illegible]	28-10-85
1D	5-469	[illegible]	28-10-85
1E	5-567	[illegible]	4-12-85

THESE DRAWINGS AND SPECIFICATIONS ARE THE PROPERTY OF ROSS VIDEO LIMITED AND SHALL NOT BE REPRODUCED OR COPIED OR USED AS THE BASIS FOR THE MANUFACTURE OR SALE OF APPARATUS WITHOUT PERMISSION

ROSS VIDEO LIMITED

SCALE — TO — PCB LAYOUT

DRAWN BY A. LAWTHER

APPROVED BY

DATE 9 MAY '85

TITLE KEY BORDER PCB

DRAWING NO 2210-43

RVS 210

ISSUE 1E SHEET 1 OF 1 SHEETS

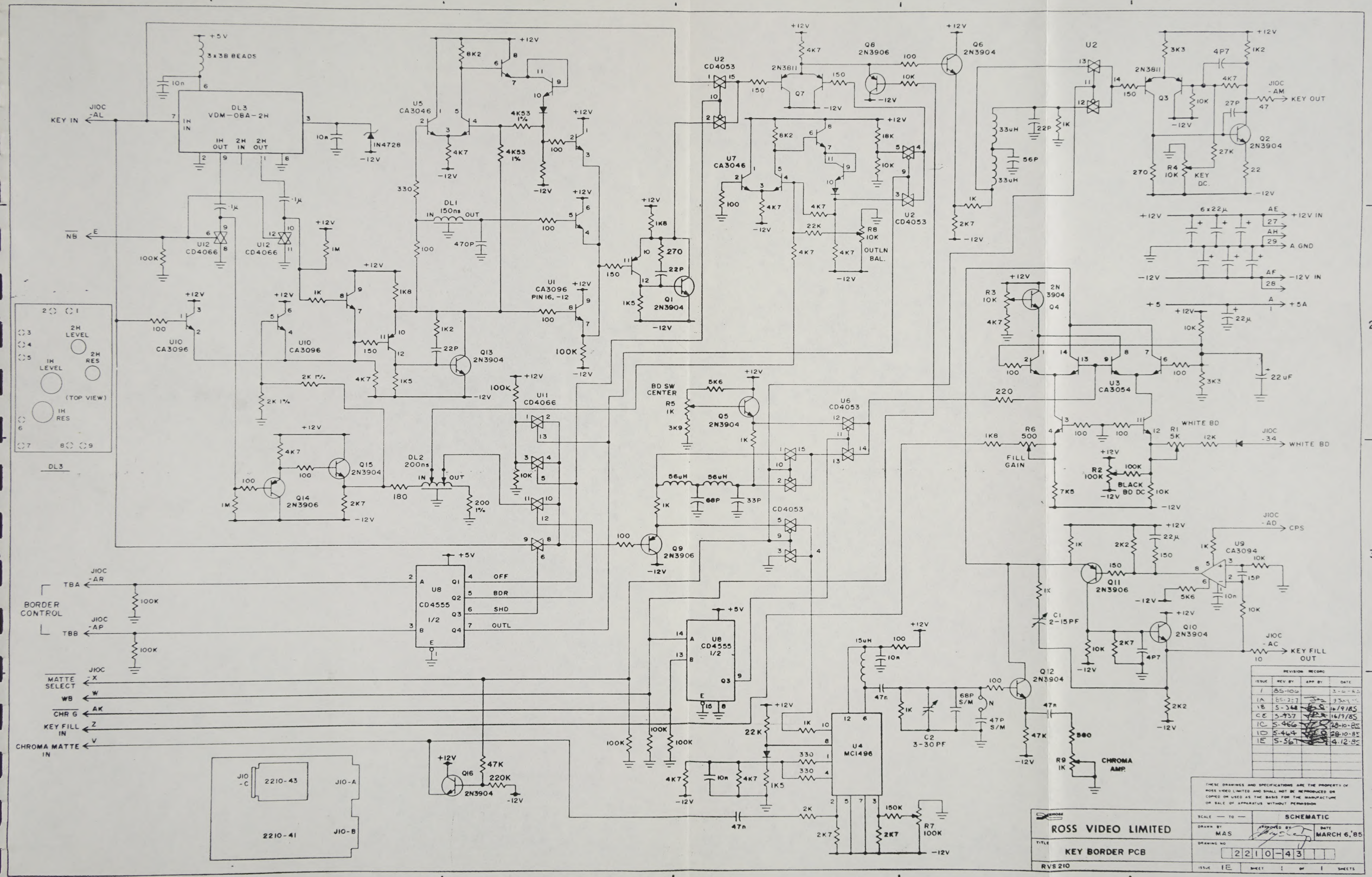
KEY IN
JIOC -AL
DL3 VDM-OBA-2H
1H IN
1H OUT
2H IN
2H OUT
3x3B BEADS
IN4728
NB
E
U12 CD4066
U10 CA3096
U5 CA3046
DL1 150ns
U1 CA3096 PIN 16, -12
Q13 2N3904
Q1 2N3904
U11 CD4066
DL2 200ns
Q15 2N3904
Q14 2N3906
U2 CD4053
U7 CA3046
Q7 2N3811
Q8 2N3906
Q6 2N3904
U2
Q3 2N3811
Q2 2N3904
KEY OUT
KEY DC.
+12V IN
A GND
-12V IN
+5A
Q4 2N3904
U3 CA3054
WHITE BD
BLACK BD DC
FILL GAIN
BD SW CENTER
Q5 2N3904
U6 CD4053
Q9 2N3906
U9 CA3094
CPS
Q11 2N3906
Q10 2N3904
KEY FILL OUT
Q12 2N3904
CHROMA AMP.
U8 CD4555 1/2
OFF
BDR
SHD
OUTL
BORDER CONTROL
TBA
TBB
MATTE SELECT
WB
CHR G
KEY FILL IN
CHROMA MATTE IN
U4 MC1496
Q16 2N3904
2210-43
2210-41
JIO-A
JIO-B
JIO-C
(TOP VIEW)
2H LEVEL
2H RES
1H LEVEL
1H RES
DL3
REVISION RECORD
ISSUE REV BY APP BY DATE
1 85-106 3-6-85
1A 85-207 3-30-85
1B 5-348 6/9/85
1C 5-437 6/9/85
1D 5-466 28-10-85
1E 5-464 28-10-85
1E 5-567 4-12-85
THESE DRAWINGS AND SPECIFICATIONS ARE THE PROPERTY OF ROSS VIDEO LIMITED AND SHALL NOT BE REPRODUCED OR COPIED OR USED AS THE BASIS FOR THE MANUFACTURE OR SALE OF APPARATUS WITHOUT PERMISSION
ROSS VIDEO LIMITED
SCALE — TO —
SCHEMATIC
DRAWN BY MAS
APPROVED BY
DATE MARCH 6, '85
TITLE KEY BORDER PCB
DRAWING NO 2210-43
RVS 210
ISSUE 1E
SHEET 1 OF 1 SHEETS

REVISION RECORD			
ISSUE	REV BY	APP BY	DATE
1			

THESE DRAWINGS AND SPECIFICATIONS ARE THE PROPERTY OF ROSS VIDEO LIMITED AND SHALL NOT BE REPRODUCED OR COPIED OR USED AS THE BASIS FOR THE MANUFACTURE OR SALE OF APPARATUS WITHOUT PERMISSION

ROSS VIDEO LIMITED	SCALE — TO —	PCB LAYOUT	
	DRAWN BY: A. LAWTHER	APPROVED BY:	DATE: 9 MAY '85
RGB KEYER PCB	DRAWING NO: 2210-44		
210	ISSUE 1	SHEET 1 OF 1 SHEETS	

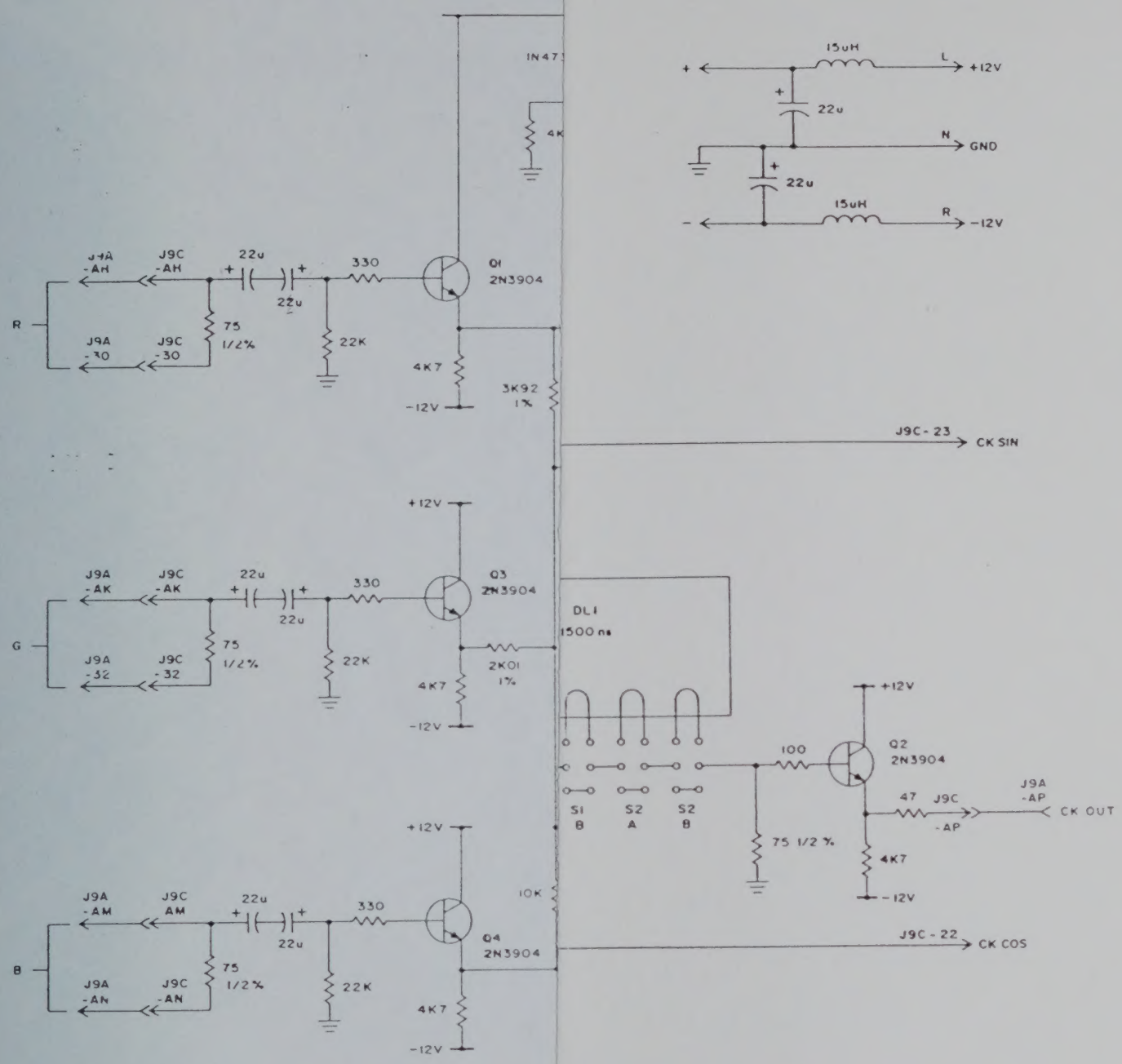

REVISION RECORD			
ISSUE	REV. BY	APP. BY	DATE
1			

THESE DRAWINGS AND SPECIFICATIONS ARE THE PROPERTY OF ROSS VIDEO LIMITED AND SHALL NOT BE REPRODUCED OR COPIED OR USED AS THE BASIS FOR THE MANUFACTURE OR SALE OF APPARATUS WITHOUT PERMISSION

ROSS VIDEO LIMITED

SCALE — "0" —

SCHEMATIC

DRAWN BY J. MILLS

APPROVED BY

DATE 28 FEB.'85

TITLE RVS-210 RGB KEYER

DRAWING NO 22 10-44

ISSUE 1

SHEET 1

SHEETS

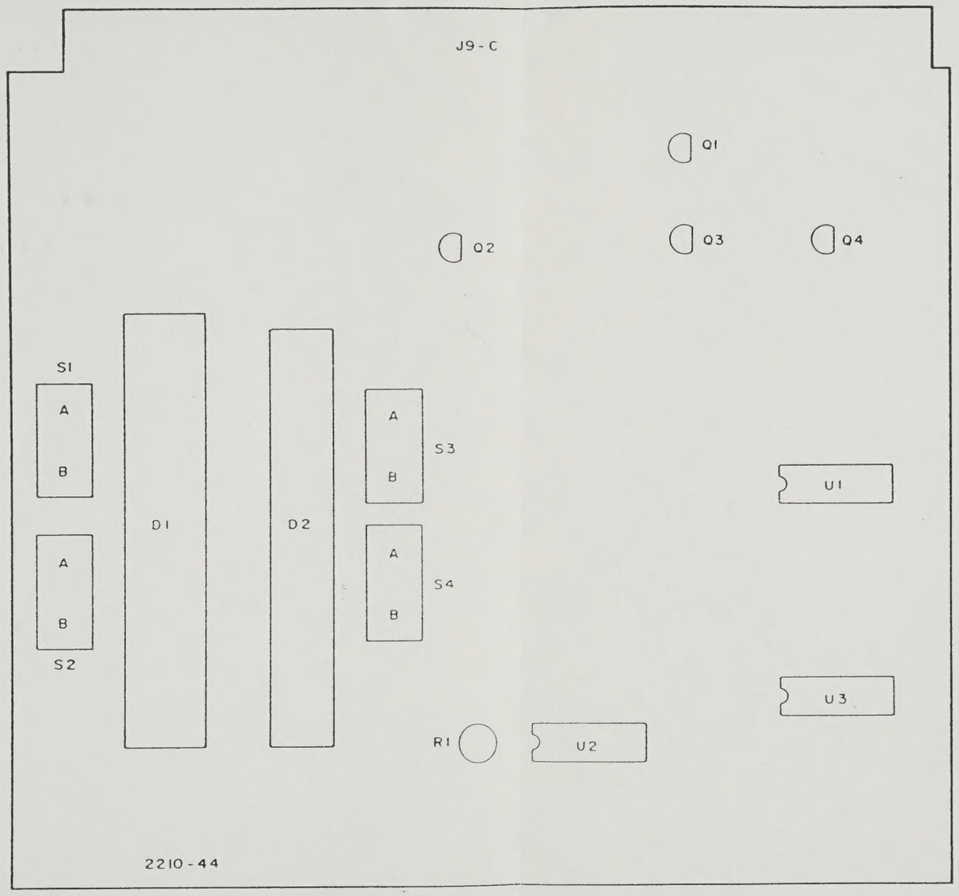

REVISION RECORD			
ISSUE	REV. BY	APP. BY	DATE
1			

THESE DRAWINGS AND SPECIFICATIONS ARE THE PROPERTY OF ROSS VIDEO LIMITED AND SHALL NOT BE REPRODUCED OR COPIED OR USED AS THE BASIS FOR THE MANUFACTURE OR SALE OF APPARATUS WITHOUT PERMISSION

ROSS VIDEO LIMITED	SCALE — TO —	PCB LAYOUT	
	DRAWN BY: A. LAWTHER	APPROVED BY:	DATE: 9 MAY '85
TITLE: RGB KEYER PCB	DRAWING NO: 2210-44		
RVS 210	ISSUE 1	SHEET 1 OF 1 SHEETS	

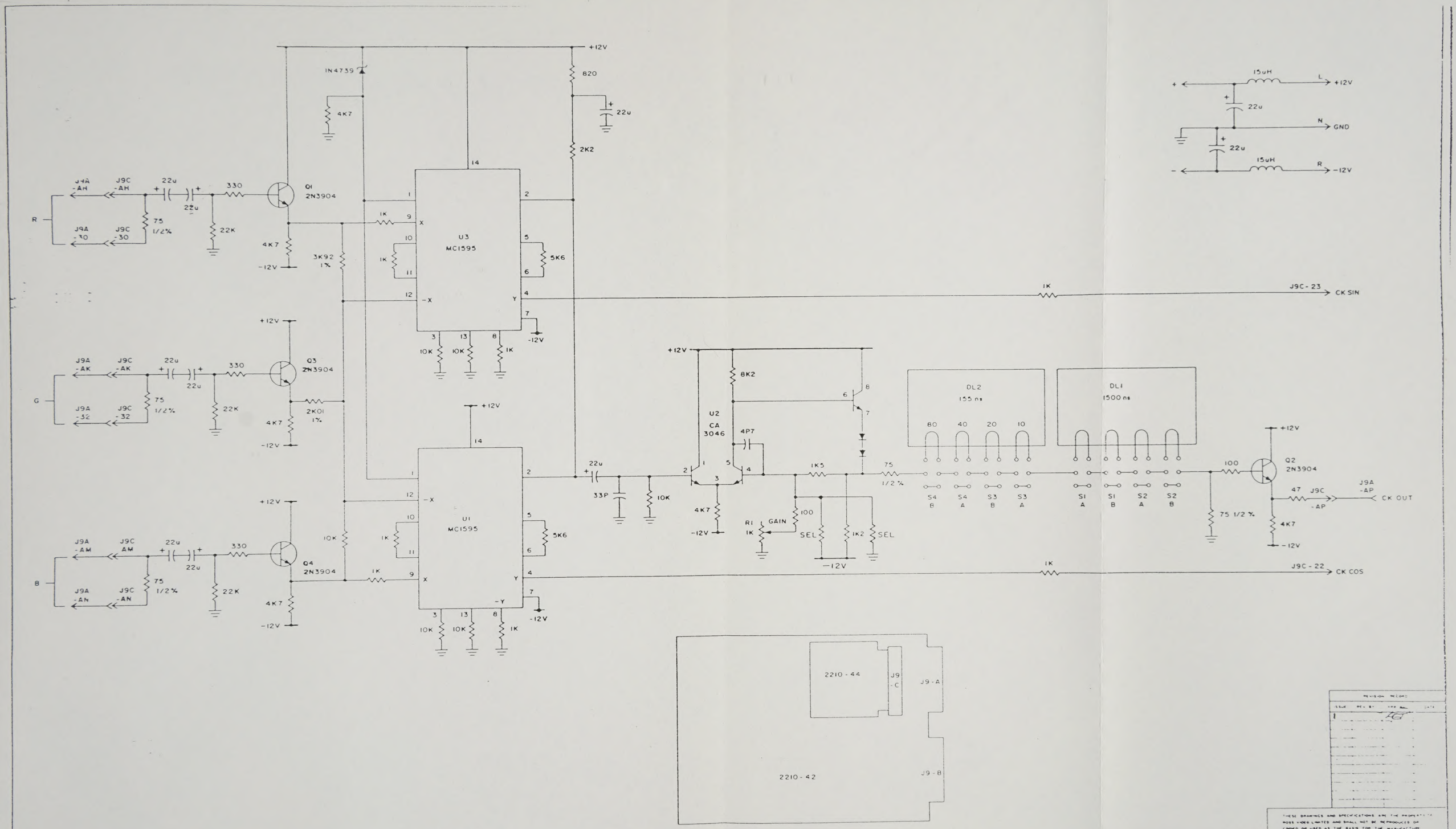

REVISION RECORD

ISSUE	REV. BY	APP. BY	DATE
1			

THESE DRAWINGS AND SPECIFICATIONS ARE THE PROPERTY OF ROSS VIDEO LIMITED AND SHALL NOT BE REPRODUCED OR COPIED OR USED AS THE BASIS FOR THE MANUFACTURE OR SALE OF APPARATUS WITHOUT PERMISSION

ROSS VIDEO LIMITED

TITLE: RVS-210 RGB KEYER

SCALE — TO —

SCHEMATIC

DRAWN BY: J. MILLS

APPROVED BY:

DATE: 28 FEB.'85

DRAWING NO: 2210-44

ISSUE 1 SHEET 1 SHEETS

Ross Video Limited, PO Box 220, 500 John St., Iroquois, Ont., Canada K0E 1K0 Phone (613)652-4886 Fax (613)652-4425
Ross Video Inc., PO Box 880, Ogdensburg, New York, USA 13669-0880